B301 PH-0289

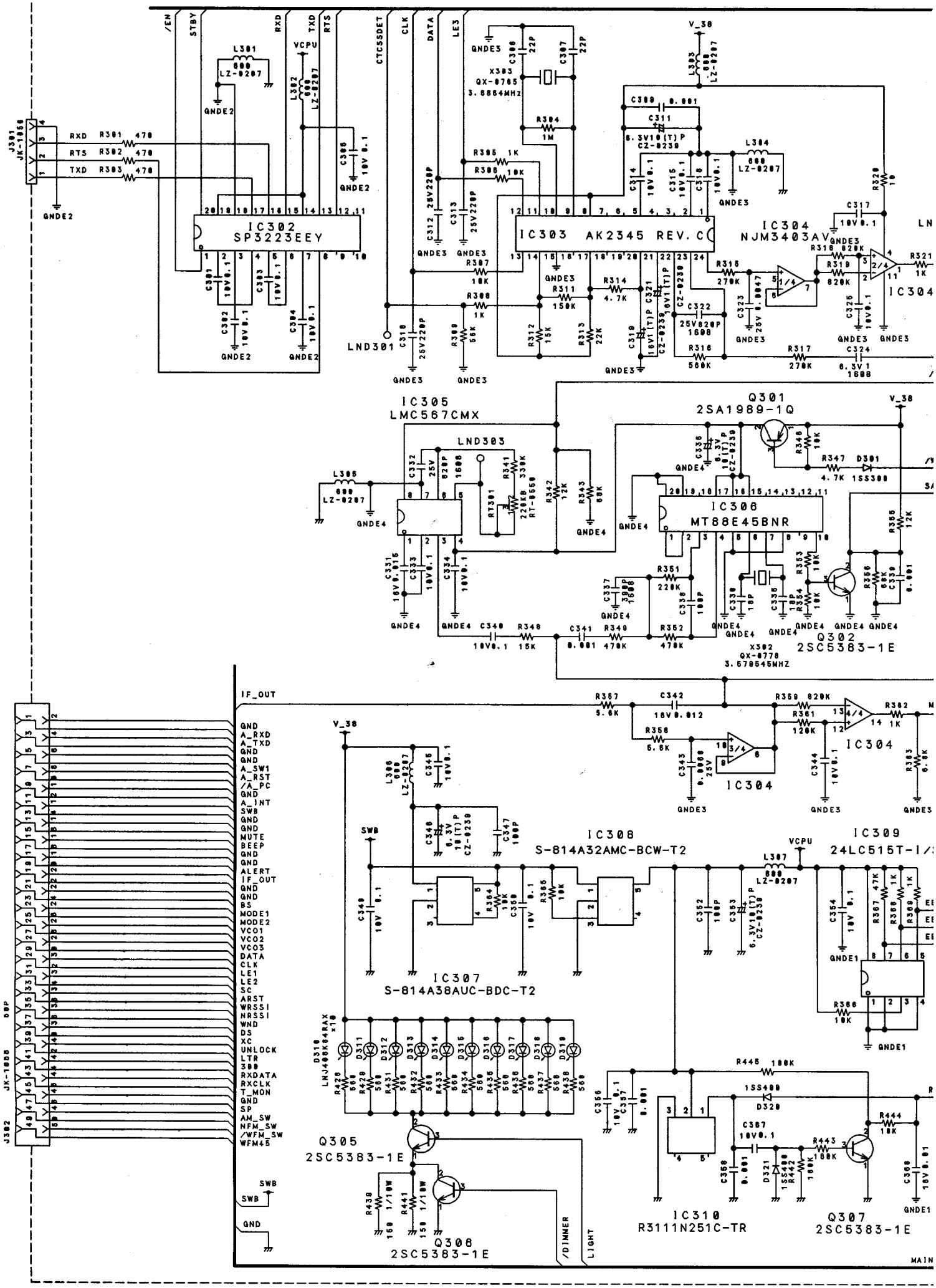
IC302
SP3223EEY
IC303 AK2345 REV. C
IC304
NJM3403AV
IC305
LMC567CMX
IC306
MT88E45BNR
IC307
S-814A38AUC-BDC-T2
IC308
S-814A32AMC-BCW-T2
IC309
24LC515T-I/
IC310
R3111N251C-TR
Q301
2SA1989-1Q
Q302
2SC5383-1E
Q305
2SC5383-1E
Q306
2SC5383-1E
Q307
2SC5383-1E
X303
QX-0765
3.6864MHz
X302
QX-0778
3.579545MHz
LND301
LND303
J301
JK-1056
J302
JK-1055
50P
/EN
STBY
RXD
TXD
RTS
VCPU
CTCSSDET
CLK
DATA
LE3
V_38
IF_OUT
GND
A_RXD
A_TXD
A_SW1
A_RST
/A_PC
A_INT
SWB
MUTE
BEEP
ALERT
BS
MODE1
MODE2
VCO1
VCO2
VCO3
LE1
LE2
SC
ARST
WRSSI
NRSSI
WND
DS
XC
UNLOCK
LTR
300
RXDATA
RXCLK
T_MON
SP
AM_SW
NFM_SW
/WFM_SW
WFM45
/DIMMER
LIGHT
MAIN

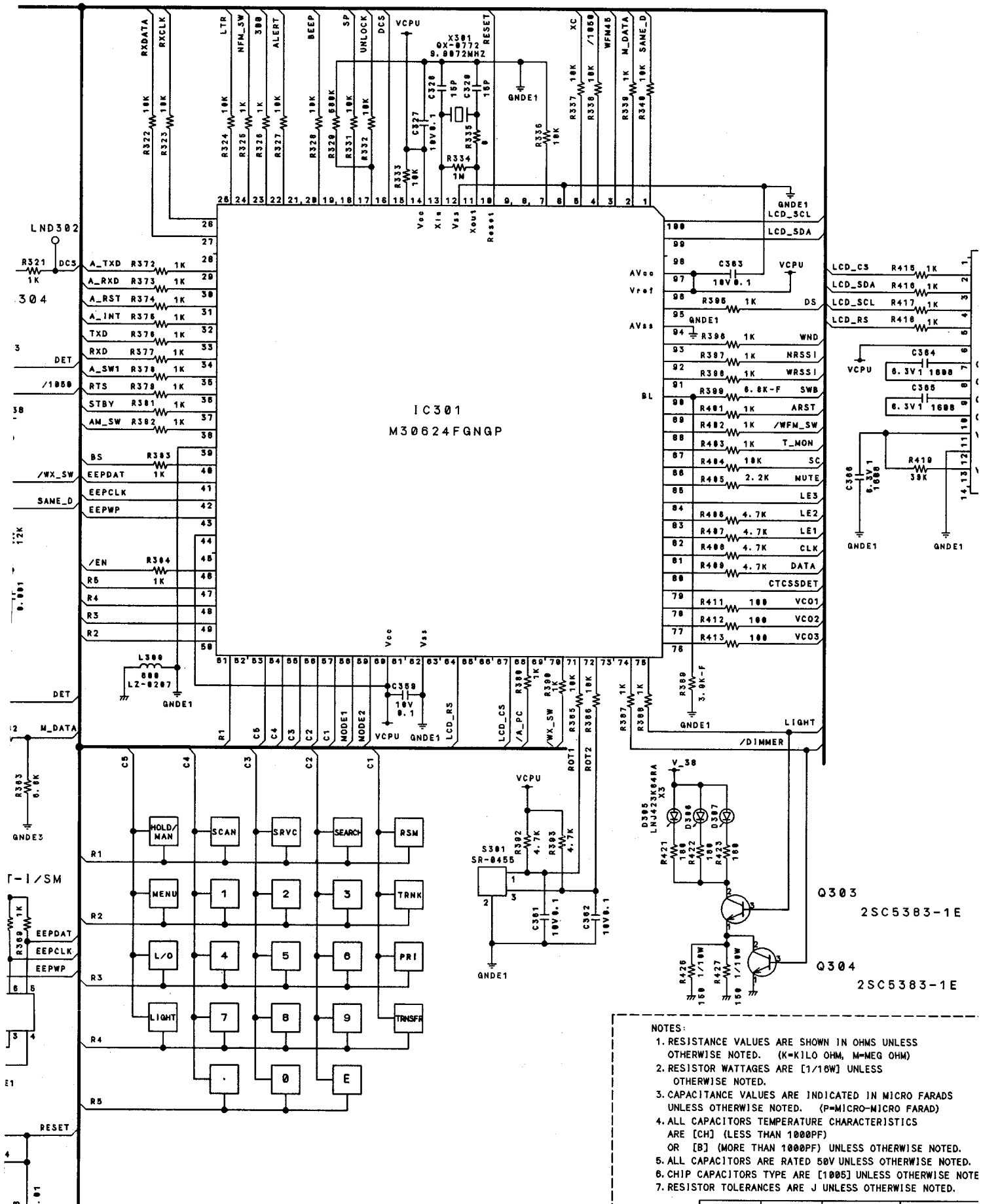

NOTES:

1. RESISTANCE VALUES ARE SHOWN IN OHMS UNLESS OTHERWISE NOTED. (K=KILO OHM, M=MEG OHM)
2. RESISTOR WATTAGES ARE [1/16W] UNLESS OTHERWISE NOTED.
3. CAPACITANCE VALUES ARE INDICATED IN MICRO FARADS UNLESS OTHERWISE NOTED. (P=MICRO-MICRO FARAD)
4. ALL CAPACITORS TEMPERATURE CHARACTERISTICS ARE [CH] (LESS THAN 1000PF) OR [B] (MORE THAN 1000PF) UNLESS OTHERWISE NOTED.
5. ALL CAPACITORS ARE RATED 50V UNLESS OTHERWISE NOTED.
6. CHIP CAPACITORS TYPE ARE [1005] UNLESS OTHERWISE NOTE
7. RESISTOR TOLERANCES ARE J UNLESS OTHERWISE NOTED.

REVISIONS																		
	REV. CODE	△	△	△	△	△	△	△	△	△	△	△	△	△	△	△	△	△
	DATE																	
	LOT#/RN#																	
	REVISED BY																	
	CHECKED BY																	

DESIGN	DRAWN. BY	UNIDEN No.	MODEL No.
'02/02/01	'04/03/02	UB315A	UBC3300XLT
Y. HOSHI	M. TAKAHASHI	TITLE MICOM ASS'Y SCHEMATIC DIAGRAM	
CHECK. BY	APPRO. BY	DRAWING No.	
REV. No		UNIDEN CORP.	