Rikaline GPS-22

GPS Receiver Module

User's Guide

Oct. 06, 2002

Positioning Accuracy:

3m CEP (50%) or <5m CEP ((90%)

Low Power:

17mA typical -- tracking at 3.3 Volts, full power

Rikaline Marketing Corp.

5F-1, 125, Roosevelt Rd. Sec. 5, Taipei 116, Taiwan, R.O.C.
Phone: +886-2-2934-5456 Fax: +886-2-2934-4373
E-Mail: info@rikaline.com.tw Web: www.rikaline.com.tw

All Right Reserved

TABLE OF CONTENTS

1. Introduction 3
1.1 Overview 3
1.2 Features 3
1.3 FirstGPS Architecture Highlights 3
1.4 Application 3
1.3 Technology specifications 3

2. Operational Characteristic 4
2.1 Initialization 4
2.2 Navigation 4

3. Hardware Interface 6
3.1 Physical Characters 6
3.2 Pin Definition 6

4. Software Interface 8
4.1 NMEA Transmitted Message 8
4.2 RTCM Received Data 11
4.3 Syntax Setting 11
4.4 Defaulting Setting Details 14
4.5 Application Information 15

5. Earth Datums 16
5.1 Earth Datums 16

6. Ordering Information 19
6.1 Products Options 19
6.2 Accessories 19
6.3 Other Products 19

7. Warranty 19

Rikaline Marketing Corp. 5F-1, 125, Roosevelt Road, Sec. 5, Taipei, Taiwan 116
Tel: ++886 2 2934 5456 Fax: ++886 2 2934 4373 E-Mail: info@rikaline.com.tw Web: www.rikaline.com.tw

1. Introduction

1.1 Overview

The **Rikaline** GPS-22 GPS Receiver is a GPS receiver featuring the revolutionary **FirstGPS™** architecture. This complete enabled GPS receiver module provides high position and speed accuracy performances as well as high sensitivity and tracking capabilities in urban canyon conditions. The solution enables small form factor package. The GPS-22 delivers major advancements in GPS performances, accuracy, integration, computing power and flexibility. It is designed to simplify the embedded system integration process.

This positioning application meets strict needs such as car navigation, mapping, surveying, agriculture and so on. Only clear view of sky and certain power supply are necessary to the unit. GPS-22 communicates with other electronic utilities via compatible dual-channel through RS-232 or TTL and saves critical satellite data in built–in memory backup. With low power consumption, the GPS-22 tracks up to 8 satellites at a time, re-acquires satellite signals in 100 ms and updates position data every second.

1.2 Features

The GPS-22 provides a host of features that make it easy for integration and use.

1. Position accuracy in < 3m CEP (50%) or <5m CEP ((90%) without SA (horizontal)
2. Ultra low power: 17mA typical -- tracking at 3.3 Volts, full power
3. High sensitivity: to -173 dBW tracking, superior urban canyon performances
4. Small form factor and low cost solution
5. Ready-to-plug solution. Easily integrated into existing systems
6. On-board RAM for GPS navigation data
7. PPS output (User may have different interval setting from 1 second to 1 minute.
8. Differential capability utilizes real-time RTCM corrections producing < 1 meter position accuracy.
9. FLASH based program memory: New setting is stored permanently.
10. Positioning display status: A LED indicator could be installed to provides users visible positioning status. LED “ON” when power connected and “BLINKING” when positioned. No more extra device needed.

1.3 FirstGPS Architecture Highlights

1.3.1 Industry Leading GPS Performance

- Builds on high performance **FirstGPS™** core
- Satellite signal tracking engine to perform GPS acquisition and tracking functions without CPU intervention
- High sensitivity: to -143 dBm tracking, superior urban canyon performances
- Position accuracy: < 3m CEP (50%) without SA (horizontal)
- Warm Start is under 42 seconds (90%)
- Hot Start is under 10 seconds (90%)

1.3.2 Low Power

- Ultra low power integrated circuit design, optimized RF and DSP architectures
- Further power saving thanks to 4 different power down mode

1.4 Application

1. Car Navigation
2. Mapping
3. Surveying
4. Agriculture
5. Palmtop, Laptop, PDA
6. Location Based Services enabled devices
7. Asset management/tracking
8. Handheld receivers

1.5 Technology specifications

1.5.1 Physical Dimension

Rikaline Marketing Corp. 5F-1, 125, Roosevelt Road, Sec. 5, Taipei, Taiwan 116
Tel: ++886 2 2934 5456 Fax: ++886 2 2934 4373 E-Mail: info@rikaline.com.tw Web: www.rikaline.com.tw

1. Size: 31.59(W) x 26.59(D) x 11.20(H) (mm)
   1.24”(W) x 1.05”(D) x 0.44”(H)
2. Weight: 25 g

1.5.2 Environmental Characteristics

1) Operating temperature: -40°C to +85°C (internal temperature)
2) Storage temperature: -55°C to +100°C

1.5.3 Electrical Characteristics

1) Input voltage: +3.0 ~ 3.65 VDC.
2) HFL antenna connector: Active or patch (3.0V antenna is recommended).

1.5.4 Functional Block Diagram

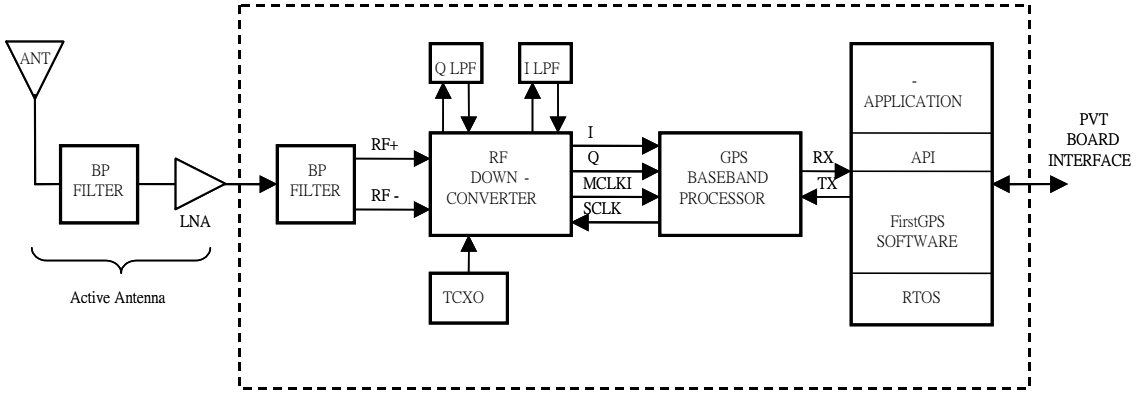

1.5.5 Performance

1) Tracks up to 8 satellites.
2) Update rate: 1 second.
3) Acquisition time:

Reacquisition	0.1	sec. (90%)
Hot start	10	sec. (90%)
Warm start	42	sec. (90%)
Cold start	120	sec. (90%)

4) Position accuracy:

Non DGPS (Differential GPS)

Position	<3m CEP (50%) or <5 m CEP (90%)	
Velocity	0.1	meters/second.
Time	1	microsecond synchronized GPS time

DGPS (Differential GPS)

Position	<1 m, typical	
Velocity	0.05	meters/second, typical

5) Dynamic Conditions:

Altitude	18,000	meters(60,000 feet) max
Velocity	515	meters/second (1000 knots) max
Acceleration	4	G, max
Jerk	20	meters/second³, max

1.5.6 Interfaces

1) Dual communication channel TTL or RS232 levels, with user selectable baud rate (2400, 4800-Default, 9600, 19200, 38400, 57600, 115200).
2) NMEA 0183 Version 2.1 ASCII output (GGA, GLL, GSV, GSA, RMC, VTG, ZDA).
3) Real-time Differential Correction input (RTCM SC-104 message types 1, 2 and 9).

Rikaline Marketing Corp. 5F-1, 125, Roosevelt Road, Sec. 5, Taipei, Taiwan 116
Tel: ++886 2 2934 5456 Fax: ++886 2 2934 4373 E-Mail: info@rikaline.com.tw Web: www.rikaline.com.tw

2. Operational characteristics

2.1 Initialization

As soon as the initial self-test is complete, the GPS-22 begins the process of satellite acquisition and tracking automatically. Under normal circumstances, it takes approximately 120 seconds to achieve a position fix, 42 seconds if ephemeris data is known. After a position fix has been calculated, information about valid position, velocity and time is transmitted over the output channel.

The GPS-22 utilizes initial data, such as last stored position, date, time and satellite orbital data, to achieve maximum acquisition performance. If significant inaccuracy exists in the initial data, or the orbital data is obsolete, it may take more time to achieve a navigation solution. The FirstGPS™ architecture provides superior performance. However, acquisition performance can be improved as the host system initializes the GPS-22 in the following situation:

1. Moving further than 500 kilometers.
2. Failure of Data storage due to the inactive memory power back up.

2.2 Navigation

After the acquisition process is complete, the GPS-22 sends valid navigation information over output channels. These data include:

1) Latitude/longitude/altitude
2) Velocity
3) Date/time
4) Error estimates
5) Satellite and receiver status

The GPS-22 sets the default of auto-searching for real-time differential corrections in RTCM SC-104 standard format, with the message types 1, 2, or 9. It accomplishes the satellite data to generate a differential (DGPS) solution. The host system, at its option, may also command the GPS-22 to output a position whenever a differential solution is available.

Rikaline Marketing Corp. 5F-1, 125, Roosevelt Road, Sec. 5, Taipei, Taiwan 116
Tel: ++886 2 2934 5456 Fax: ++886 2 2934 4373 E-Mail: info@rikaline.com.tw Web: www.rikaline.com.tw

3. Hardware interface

3.1 Physical Characters

1. Size: 31.59(W) x 26.59(D) x 11.20(H) (mm)
   1.24”(W) x 1.05”(D) x 0.44”(H)

2. Weight: 25 g

3.1.1 Details Drawing

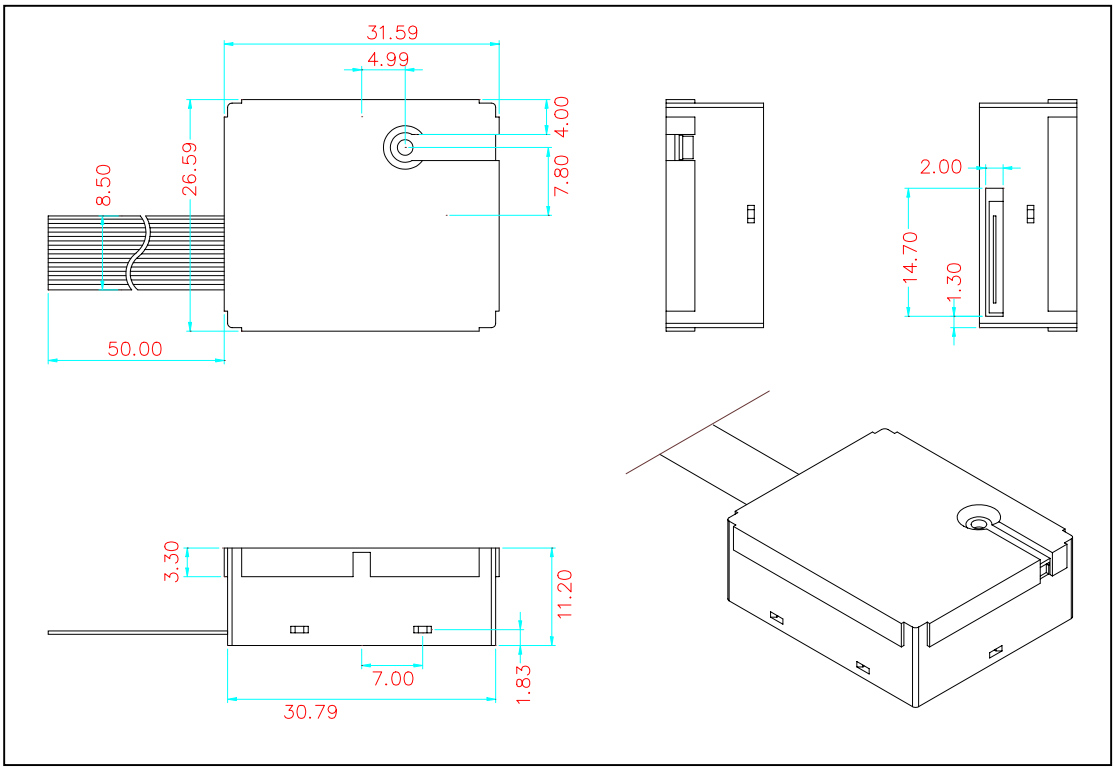

3.2 Pin Definition

PIN	NAME	TYPE	DESCRIPTION
1	GND		Power and Signal Ground
2	ON/OFF	I	ON / Off command line
3	VCC		3.0 to 3.6 Volts DC Input Power Supply
4	USPED	I	9600/4800 Bd UART Speed
5	RXA	I	Serial Receive Data, Port A, GPS NMEA Data
6	VRTCBK		Back-up supply for the RTC
7	TXA	O	Serial Transmit Data, Port A, GPS NMEA Data
8	PPS	O	One Pulse Per Second timing output
9	GND		Power and Signal Ground
10	RESETN		Manual Reset, Active low
11	ALMANAC		1(high): almanac valid; 0 (low): almanac not valid
12	STY1	I	For future use, connected to GPIO “1”
13			N.C.
14	STY0		For future use, connected to GPIO “0”
15			N.C.
16	OSCSTOPN		MCU oscillator is stopped (Active Low)

Rikaline Marketing Corp. 5F-1, 125, Roosevelt Road, Sec. 5, Taipei, Taiwan 116
Tel: ++886 2 2934 5456 Fax: ++886 2 2934 4373 E-Mail: info@rikaline.com.tw Web: www.rikaline.com.tw

1) All I/Os on the Data Interface are related to VCC (3 to 3.6 Volts) and GND levels.
2) **ON/OFF:** control the GPS engine "ON" or "OFF". If this pin is pulled "HIGH" whenever a reset condition occurs or if it is turned "HIGH" during operating, the GPS engine is turned "ON". If this pin is pulled "LOW" whenever a reset condition occurs, the GPS engine is not started. If this pin is turned "LOW" when in operating, the GPS engine is turned "OFF". When ON/OFF is "LOW", the on/off state can be superseded with the **PXEMaRT** manufacturer specific NMEA sentence on RXA, as defined below.

3) **USPED, RXA and TXA**: The Serial NMEA data port (RXA and TXA) is an asynchronous serial port (UART).
   USPED "HIGH": **9600** Baud rate, 8 bit data, no parity check, 1 stop bit and no flow control
   USPED "LOW": **4800** Baud rate, 8 bit data, no parity check, 1 stop bit and no flow control .
   This setting can be modified with the **PXEMaPT** manufacturer specific NMEA sentence defined below.

4) **PPS:** This is Pulse Per Second highly accurate timing signal generated by the on-board GPS base band processor. After a reset condition, the default setting for this port is inactive. This setting can be modified with the **PXEMaPS** manufacturer specific NMEA sentence defined below.

5) The receiver has 2 reset conditions: first, on power-on, thanks to an on-board Power On Reset circuitry; and second an external reset when the **RESETN** pin is "LOW".

6) **VCC**: The VCC core pin is connected to the on-board regulated supply voltage that powers the MCU and GPS base band cores.

Rikaline Marketing Corp. 5F-1, 125, Roosevelt Road, Sec. 5, Taipei, Taiwan 116
Tel: ++886 2 2934 5456 Fax: ++886 2 2934 4373 E-Mail: info@rikaline.com.tw Web: www.rikaline.com.tw

4. Software Interface

The GPS-22 interface protocol is based on the National Marine Electronics Association's NMEA 0183 ASC II interface specification, which is defined in NMEA 0183, Version 2.1 and the Radio Technical Commission for Maritime Services (RTCM Recommended Standards For Differential Navstar GPS Service, Version 2.1, RTCM Special Committee No.104).

4.1 NMEA Transmitted Messages

The GPS-22 outputs data in NMEA-0183 format as defined by the National Marine Electronics Association (NMEA), Standard.

The default communication parameters for NMEA output are 9600/4800 baud, 8 data bits, stop bit, and no parity.

Table 4-1 NMEA-0183 Output Messages

NMEA Record	Description
GPGGA	Global positioning system fixed data
GPGLL	Geographic position- latitude/longitude
GPGSA	GNSS DOP and active satellites
GPGSV	GNSS satellites in view
GPRMC	Recommended minimum specific GNSS data
GPVTG	Course over ground and ground speed
GPZDA	Date & Time

4.1.1 Global Positioning System Fix Data (GGA)

$GPGGA,161229.487,3723.2475,N,12158.3416,W,1,07,1.0,9.0,M, , , ,0000*18

Table 4-2 GGA Data Format

Name	Example	Units	Description
Message ID	$GPGGA		GGA protocol header
UTC Time	161229.487		Hhmmss.sss
Latitude	3723.2475		Ddmm.mmmm
N/S Indicator	N		N=north or S=south
Longitude	12158.3416		dddmm.mmmm
E/W Indicator	W		E=east or W=west
Position Fix Indicator	1		See Table 5-3
Satellites Used	07		Range 0 to 12
HDOP	1.0		Horizontal Dilution of Precision
MSL Altitude	9.0	Meters	
Units	M	Meters	
Geoid Separation		Meters	
Units	M	Meters	
Age of Diff. Corr.		second	Null fields when DGPS is not used
Diff. Ref. Station ID	0000		
Checksum	*18		
<CR> <LF>			End of message termination

Table 4-3 Position Fix Indicator

Value	Description
0	0 Fix not available or invalid
1	GPS SPS Mode, fix valid
2	Differential GPS, SPS Mode, fix valid
3	GPS PPS Mode, fix valid

Rikaline Marketing Corp. 5F-1, 125, Roosevelt Road, Sec. 5, Taipei, Taiwan 116
Tel: ++886 2 2934 5456 Fax: ++886 2 2934 4373 E-Mail: info@rikaline.com.tw Web: www.rikaline.com.tw

4.1.2 Geographic Position with Latitude/Longitude (GLL)

Table 4-4 contains the values for the following example:

$GPGLL,3723.2475,N,12158.3416,W,161229.487,A*2C

Table 4-4 GLL Data Format

Name	Example	Units	Description
Message ID	$GPGLL		GLL protocol header
Latitude	3723.2475		ddmm.mmmm
N/S Indicator	N		N=north or S=south
Longitude	12158.3416		dddmm.mmmm
E/W Indicator	W		E=east or W=west
UTC Position	161229.487		hhmmss.sss
Status	A		A=data valid or V=data not valid
Checksum	*2C		
<CR> <LF>			End of message termination

4.1.3 GNSS DOP and Active Satellites (GSA)

Table 4-5 contains the values for the following example:

$GPGSA,A,3,07,02,26,27,09,04,15, , , , , ,1.8,1.0,1.5*33

Table 4-5 GSA Data Format

Name	Example	Units	Description
Message ID	$GPGSA		GSA protocol header
Mode 1	A		See Table 5-6
Mode 2	3		See Table 5-7
Satellite Used (1)	07		Sv on Channel 1
Satellite Used (1)	02		Sv on Channel 2
……			….
Satellite Used			Sv on Channel 12
PDOP	1.8		Position Dilution of Precision
HDOP	1.0		Horizontal Dilution of Precision
VDOP	1.5		Vertical Dilution of Precision
Checksum	*33		
<CR> <LF>			End of message termination

(1) Satellite used in solution.

Table 4-6 Mode 1

Value	Description
M	Manual—forced to operate in 2D or 3D mode
A	2D Automatic—allowed to automatically switch 2D/3D

Table 4-7 Mode 2

Value	Description
1	Fix Not Available
2	2D
3	3D

4.1.4 GNSS Satellites in View (GSV)

Table 4-8 contains the values for the following example:

$GPGSV,2,1,07,07,79,048,42,02,51,062,43,26,36,256,42,27,27,138,42*71
$GPGSV,2,2,07,09,23,313,42,04,19,159,41,15,12,041,42*41

Table 4-8 GSV Data Format

Name	Example	Units	Description

Rikaline Marketing Corp. 5F-1, 125, Roosevelt Road, Sec. 5, Taipei, Taiwan 116
Tel: ++886 2 2934 5456 Fax: ++886 2 2934 4373 E-Mail: info@rikaline.com.tw Web: www.rikaline.com.tw

Message ID	$GPGSV		GSV protocol header
Number of Messages	2		Range 1 to 3
Message Number	1		Range 1 to 3
Satellites in View	07		Range 1 to 12
Satellite ID	07		Channel 1 (Range 1 to 32)
Elevation	79	degrees	Channel 1 (Maximum 90)
Azimuth	048	degrees	Channel 1 (True, Range 0 to 359)
SNR (C/No)	42	dBHz	Range 0 to 99, null when not tracking
....	....		
Satellite ID	27		Channel 4 (Range 1 to 32)
Elevation	27	degrees	Channel 4 (Maximum 90)
Azimuth	138	degrees	Channel 4 (True, Range 0 to 359)
SNR (C/No)	42	dBHz	Range 0 to 99, null when not tracking
Checksum	*71		
<CR> <LF>			End of message termination

NOTE: Items <4>,<5>,<6> and <7> repeat for each satellite in view to a maximum of four (4) satellites per sentence. Additional satellites in view information must be sent in subsequent sentences. These fields will be null if unused.

4.1.5 Recommended Minimum Specific GNSS Data (RMC)

Table 4-9 contains the values for the following example:

$GPRMC,161229.487,A,3723.2475,N,12158.3416,W,0.13,309.62,120598, ,*10

Table 4-9 RMC Data Format

Name	Example	Units	Description
Message ID	$GPRMC		RMC protocol header
UTC Time	161229.487		hhmmss.sss
Status	A		A=data valid or V=data not valid
Latitude	3723.2475		ddmm.mmmm
N/S Indicator	N		N=north or S=south
Longitude	12158.3416		dddmm.mmmm
E/W Indicator	W		E=east or W=west
Speed Over Ground	0.13	Knots	
Course Over Ground	309.62	Degrees	True
Date	120598		ddmmyy
Magnetic Variation		Degrees	E=east or W=west
Checksum	*10		
<CR> <LF>			End of message termination

4.1.6 Course Over Ground and Ground Speed (VTG)

Table 4-10 contains the values for the following example:

$GPVTG,309.62,T, ,M,0.13,N,0.2,K*6E

Table 4-10 VTG Data Format

Name	Example	Units	Description
Message ID	$GPVTG		VTG protocol header
Course	309.62	Degrees	Measured heading
Reference	T		True
Course		Degrees	Measured heading
Reference	M		Magnetic (1)
Speed	0.13	Knots	Measured horizontal speed
Units	N		Knots
Speed	0.2	Km/hr	Measured horizontal speed
Units	K		Kilometers per hour
Checksum	*6E		

Rikaline Marketing Corp. 5F-1, 125, Roosevelt Road, Sec. 5, Taipei, Taiwan 116
Tel: ++886 2 2934 5456 Fax: ++886 2 2934 4373 E-Mail: info@rikaline.com.tw Web: www.rikaline.com.tw

<CR> <LF>			End of message termination

(1) All “course over ground” data are geodetic WGS84 directions.

4.1.7 Time & Date (ZDA)

Table 4-11 contains the values for the following example:

$GPVTG,114523.62,12,04,2001,10,34*6E

Table 4-11 ZDA Data Format

Name	Example	Units	Description
Message ID	$GPZDA		ZDA protocol header
Hour, Min, Sec, Sub Sec	114523.62		Hhmmss.ss
Day	12		Day in UTC, 01to 12
Month	04		Month in UTC, 01 to 12
Year	2001		Year in UTC
Local Zone Hours	10		Local zone hours, +/- 13 hours
Local Zone Minutes	34		Local zone minutes, 0 to +59
Checksum	*6E		
<CR> <LF>			End of message termination

4.2 RTCM Received Data

The default communication parameters for DGPS Input are 9600 baud, 8 data bits, stop bit, and no parity. Position accuracy of less than 5 meters can be achieved with the GPS-22 by using Differential GPS (DGPS) real-time pseudo-range correction data in RTCM SC-104 format, with message types 1, 5, or 9. As using DGPS receiver with different communication parameters, GPS-22 may decode the data correctly to generate accurate messages and save them in battery-back SRAM for later computing.

4.3 Syntax Setting

4.3.1 Basic Manufacturing Default:

Datum: WGS84.
Baud Rate: 9600/4800.
Output: GGA, GSA, GSV, RMC or by demand.

* Details please see paragraph 4.4

4.3.2 Output Setting

4.3.2.1 General Description

The NMEA Standard v2.1 dictates that proprietary NMEA sentences have the following structure:

$Paaaxxxxxxxxxxxxxx*hh

where *aaa* – mnemonic code, XEM in our case; *xxxxxxxxx*…– data; *hh* – sentence checksum

Two types of input sentences are defined: ***query*** and *set*. ***Query*** sentences request certain information from the receiver. *Set* sentences allow configuring the receiver with certain configuration parameters or forcing the receiver to perform a specific action. For each type of input sentences, a corresponding output response sentence is defined.
For a ***query*** sentence, the *response* sentence contains requested data. For a ***set*** sentence, the *response* sentence contains the status of the action requested in the ***set*** sentence. Taking these aspects into account, the following is the general structure of the specific NMEA sentence:

$PXEMmaa,x1,x2,x3,x4,….,xN*hh

Rikaline Marketing Corp. 5F-1, 125, Roosevelt Road, Sec. 5, Taipei, Taiwan 116
Tel: ++886 2 2934 5456 Fax: ++886 2 2934 4373 E-Mail: info@rikaline.com.tw Web: www.rikaline.com.tw

where *m* – sentence type: 'Q' for 'query', 'S' for 'set', 'R' for 'response'; *aa* – proprietary sentence identifier (see below); *x1…xN* – data parameters (only for *set* and *query response* sentences); *hh* – sentence checksum

NOTE: Each of the data parameters must be preceded with a comma, except for the *aa* sentence identifier, and the checksum which is preceded with a checksum delimiter character '*'.

- QUERY sentence: to send a *query* sentence, no data fields are transmitted. The following format is used:
  $PXEMQaa*hh

- RESPONSE sentence to QUERY: for a *query* sentence, a *response* sentence with all fields is transmitted. The following format is used:
  $PXEMRaa,x1,x2,x3,x4,….,xN*hh

- SET sentence: to send a *set* sentence, x1…xN must contain valid values. The following format is used:
  $PXEMSaa,x1,x2,x3,x4,….,xN*hh

- RESPONSE sentence to SET: for a *set* sentence, a status *response* sentence is transmitted. The following format is used:
  $PXEMRaa,s*hh

  where *s* is the status of the requested action: 'A' if the action was successful; 'V' otherwise.

The following proprietary NMEA sentence identifiers are implemented:

4.3.2.2 DI – Diagnostic Message (optional)

This sentence outputs a diagnostic string. It is used to report various error conditions. This is a response-only sentence.

$PXEMRDI,ccccccc*hh where cccccc is a diagnostic string up to 50 characteristics.

4.3.2.3 NM – Sentence Mask and Automatic Output Rate

This sentence configures the application to automatically output standard NMEA sentences at a specified time interval.

$PXEMaNM,xxxx,xx*hh

Name	Example	Units	Description
Message ID	$PXEMaNM		Proprietary NM protocol header, a-mode (S = set; R = response)
Mask	0008		xxxx Output sentence mask, hex value (see Notes below)
Rate	01	sec	xx Automatic output sentence rate (00 to 99)
<CR><LF>			End of message termination

Notes:
xxxx is a hexadecimal value representing a 2-byte bit-mask where a specific bit sets or clears automatic output of a particular NMEA sentence according to the table below. The mask is derived by combining all bits which represents the NMEA sentences which will be automatically output. For example, to automatically output GGA, GSA, ZDA, and RMC, the bits 0, 4, 5, and 8 are set to 1 in a 2-byte mask, resulting in a hex value 0x131 (0x1+0x10+0x20+0x100). This value is sent as an ASCII string '0131' in the *xxxx* field of the NM sentence.

NMEA xxxx

Sentence	Bit#	Field value
GGA	0	0001
GLL	1	0002
VTG	2	0004
GSV	3	0008

Rikaline Marketing Corp. 5F-1, 125, Roosevelt Road, Sec. 5, Taipei, Taiwan 116
Tel: ++886 2 2934 5456 Fax: ++886 2 2934 4373 E-Mail: info@rikaline.com.tw Web: www.rikaline.com.tw

GSA	4	0010
ZDA	5	0020
RMC	8	0100
TF	9	0200

Example:
$PXEMSNM,0008,01*6E (set)
$PXEMSNM,a*6E (response to set: a – action status: A = success; V=failure)

4.3.2.4 PS – Pulse-Per-Second Configuration

This sentence sets the pulse-per-second (PPS) output on or off. This is a set-only sentence.

$PXEMaPS,x*hh

Name	Example	Units	Description
Message ID	$PXEMaPS		Proprietary PS protocol header, a-mode (S = set; R = response)
On/Off	1		PPS output switch (1 = ON; 0 = OFF)
<CR><LF>			End of message termination

Example:
$PXEMSPS,1*6E (set)
$PXEMSPS,a*6E (response to set: a – action status: A = success; V=failure)

4.3.2.5 PT – Port Configuration

This sentence configures the application serial port communication parameters.

$PXEMaPT,xxxxxx,x,a,x*hh

Name	Example	Units	Description
Message ID	$PXEMaPT		Proprietary PT protocol header, a-mode (S = set; R = response)
Baud rate	009600		xxxxxx Baud rate (115200, 057600, 038400, 019200, 009600, 004800, 002400)
Data Length	8		X # of data bits (7 or 8)
Parity	N		Parity (N = None; O = Odd; E = Even)
Stop bit	1		# of stop bits (1 or 2)
<CR><LF>			End of message termination

Example:
$PXEMSPT,009600,8,N,1*6E (set)
$PXEMSPT,a*6E (response to set: a – action status: A = success; V=failure)

4.3.2.6 RT – Reset the Receiver / Start-Stop FirstGPS™

This sentence forces the receiver to perform a software reset. It also allows starting up and shutting down the **FirstGPS™** library without performing a full software reset. This is a set-only sentence.

$PXEMaRT,a*hh

Name	Example	Units	Description
Message ID	$PXEMaRT		Proprietary RT protocol header, a-mode (S = set; R = response)
Command	S		C = cold sofrware reset W = warm software reset H = hot sofrware reset S = start the FirstGPS™ library X = shut down the FirstGPS™ library
<CR><LF>			End of message termination

Rikaline Marketing Corp. 5F-1, 125, Roosevelt Road, Sec. 5, Taipei, Taiwan 116
Tel: ++886 2 2934 5456 Fax: ++886 2 2934 4373 E-Mail: info@rikaline.com.tw Web: www.rikaline.com.tw

Example:
$PXEMSRT,W*6E (set)
$PXEMSRT,a*6E (response to set: a – action status: A = success; V=failure)

4.3.2.7 VR – Version Information (optional)

This sentence obtains software versions for the measurement platform (MPM) firmware, FirstGPS™ API, FirstGPS™ Library, native RTOS, and native processor (CPU). This is a query-only sentence.
Note: A complete VR sentence returns only the version of a particular product component one at a time (either MPM firmware, API, library, RTOS or CPU). The sentence must include the component type for which to obtain the version for any given query.

$PXEMaVR,a,cccccc,xx,xx,xx,xx,xx,xxxx*hh

Name	Example	Units	Description
Message ID	$PXEMaVR		Proprietary VR protocol header, a-mode (Q = set; R = response)
Component type	A		M = measurement platform (MPM) firmware A = FirstGPS™ API N = FirstGPS™ Library R = native RTOS U = native processor (CPU)
Name	abcdef		Variable length field; may be up to 17 characters long
Maj version	04		Major version number (00 to 99)
Min version	02		Minor version number (00 to 99)
Beta version	03		Beta version number (00 to 99)
Month	10		Month of the release (01 to 12)
Day	27		Day of the release (01 to 31)
Year	2002		Year of the release
<CR><LF>			End of message termination

Example:
$PXEMSVR,R*6E (set)
$PXEMSVR,R,nucleus,04,03,10,27,2000*6E (response to query)

4.3.2.8 TR – Transparent Mode

With this type of sentence an API function call as defined in the Standard and Advanced API Function Calls documents are passed thru the NMEA interface. This can be a query, set, and response type of sentence.

$PXEMaTR,c..c,x..xx, .., x..x*hh

Example:
$PXEMSTR,navGerBbAddr,%,s79&*6E (set)
$PXEMRVR,6E (response to)

4.4 DEFAULT Setting Details

4.4.1 Pulse Per Second Signal

PPS output: OFF

4.4.2 Receiver configuration

Receiver Mode	Automatic (2D/3D)	Automatic switch between 2D and 3D position fix depending on number of SV in view
Dynamics Code	Automobile	
DGPS Mode	DGPS Off	

Rikaline Marketing Corp. 5F-1, 125, Roosevelt Road, Sec. 5, Taipei, Taiwan 116
Tel: ++886 2 2934 5456 Fax: ++886 2 2934 4373 E-Mail: info@rikaline.com.tw Web: www.rikaline.com.tw

Max Oscillator Offset	6.5e-6	Limit the search range during cold start. Must be larger than TCXO tolerance+stability+aging, for ex. 1+2.5+3=6.5
Elevation Mask (in degrees)	5	SVs for which elevation is lower are ignored to compute the solution
Signal Level Mask (AMU)	2	SVs for which signal strength is lower are ignored to compute the solution
DOP Mask	12	Max Dilution Of Precision to accept the solution
PDOP Switch	6	Max Position DOP

4.4.3 FILTER configuration

Kalman Filter

4.4.4 OFFSET configuration

Offset	0 ppm
Window	-1 ppm

4.4.5 NMEA configuration

Output interval	1 second
NMEA sentences	GGA /GSA/GSV/RMC

4.4.6 APPlication settings

Protocol Output Port	9600 bauds, 8 bits data, 1 start, 1 stop, no parity
Number of channels	8
Week epoch	1024 (The offset number of 1024 week periods since 6 January 1980. Setting to 1024 includes all dates between August 22, 1999 and March 2019.)

4.5 Application Information

4.5.1 Antenna recommendation

Power supply voltage	2.7 - 3.6 V
Frequency range	1,575.42+/-1.023MHz
LNA Gain	27 dB at 3.0 V
LNA NF	1.1 dB at 3.0 V
Antenna and LNA total Gain	25 dBi Max at 3.0 V

Rikaline Marketing Corp. 5F-1, 125, Roosevelt Road, Sec. 5, Taipei, Taiwan 116
Tel: ++886 2 2934 5456 Fax: ++886 2 2934 4373 E-Mail: info@rikaline.com.tw Web: www.rikaline.com.tw

5. Earth Datums

5.1 Earth Datums

The following is a list of the GPS-22 earth datum index and the corresponding earth datum name:

Item	Datum	Reference Ellipsoid
0	ADINDAN	Ethiopia, Mali, Senegal, Sudan
1	AFGOOYE	Somalia
2	AIN EL ABD 1970	Bahrain Island, Saudi Arabia
3	ANNA 1 ASTRO 1965	Cocos Island
4	ARC 1950	Botswana, Lesotho, Malawi, Swaziland, Zaire, Zaire, Zambia, Zimbabwe
5	ARC 1960	Kenya, Tanzania
6	Ascension Island 1958	Ascension Island
7	ASTRO BEACON “E”	Iwo Jima Island
8	AUSTRALIAN GEODETIC 1966	Australia, Tasmania Island
9	AUSTRALIAN GEODETIC 1984	Australia, Tasmania Island
10	ASTRO DOS 71/4	St. Helena Island
11	ASTRONOMIC STATION 1952	Marcus Island
12	ASTRO B4 SOROL ATOLL	Tern Island
13	BELLEVUE (IGN)	Efate and Erromango Islands
14	BERMUDA 1957	Bermuda Islands
15	BOGOTA OBSERVATORY	Colombia
16	CAMPO INCHAUSPE	Argentina
17	CANTON ASTRO 1966	Phoenix Islands
18	CAPE CANAVERAL	Florida, Bahama Islands
19	CAPE	South Africa
20	CARTHAGE	Tunisia
21	CHATHAM 1971	Chatham Island (New Zealand)
22	CHUA ASTRO	Paraguay
23	CORREGO ALEGRE	Brazil
24	DJAKARTA (BATAVIA)	Sumatra Island (Indonesia)
25	DOS 1968	Gizo Island (New Georgia Islands)
26	EASTER ISLAND 1967	Easter Island
27	EUROPEAN 1950	Austria, Belgium, Denmark, Finland, France, Germany, Gibraltar, Greece, Italy, Luxembourg, Netherlands, Norway, Portugal, Spain, Sweden Switzerland
28	EUROPEAN 1979	Austria, Finland, Netherlands, Norway, Spain, Sweden Switzerland
29	FINLAND HAYFORD 1910	Finland
30	GANDAJIKA BASE	Republic of Maldives
31	GEODETIC DATUM 1949	New Zealand
32	ORDNANCE SURVEY OF GREAT BRITAIN 1936	England, Isle of Man, Scotland, Shetland Islands, Wales
33	GUAM 1963	Guam Island
34	GUX 1 ASTRO	Guadalcanal Island
35	HJORSEY 1955	Iceland
36	HONG KONG 1963	Hong Kong
37	INDIAN	Bangladesh, India, Nepal
38	INDIAN	Thailand, Vietnam

Rikaline Marketing Corp. 5F-1, 125, Roosevelt Road, Sec. 5, Taipei, Taiwan 116
Tel: ++886 2 2934 5456 Fax: ++886 2 2934 4373 E-Mail: info@rikaline.com.tw Web: www.rikaline.com.tw

39	IRELAND 1965	Ireland
40	ISTS 073 ASTRO 1969	Diego Garcia
41	JOHNSTON ISLAND 1961	Johnston Island
42	KANDAWALA	Sri Lanka
43	KERGUELEN ISLAND	Kerguelen Island
44	KERTAU 1948	West Malaysia, Singapore
45	L.C. 5 ASTRO	Cayman Brac Island
46	LIBERIA 1964	Liberia
47	LUZON	Mindanao Island
48	LUZON	Philippines (excluding Mindanao Island)
49	MAHE 1971	Mahe Island
50	MARCO ASTRO	Salvage Islands
51	MASSAWA	Eritrea (Ethiopia)
52	MERCHICH	Morocco
53	MIDWAY ASRTO 1961	Midway Island
54	MINNA	Nigeria
55	NORTH AMERICAN 1927	Alaska
56	NORTH AMERICAN 1927	Bahamas (excluding San Salvador Island)
57	NORTH AMERICAN 1927	Central America (Belize, Costa Rica, El Salvador, Guatemala, Honduras, Nicaragua)
58	NORTH AMERICAN 1927	Canal Zone
59	NORTH AMERICAN 1927	Canada (including Newfoundland Island)
60	NORTH AMERICAN 1927	Caribbean (Barbados, Caicos Islands, Cuba, Dominican Republic, Grand Cayman, Jamaica, Leeward Islands, Turks Islands)
61	NORTH AMERICAN 1927	Mean Value (CONUS)
62	NORTH AMERICAN 1927	Cuba
63	NORTH AMERICAN 1927	Greenland (Hayes Peninsula)
64	NORTH AMERICAN 1927	Mexico
65	NORTH AMERICAN 1927	San Salvador Island
66	NORTH AMERICAN 1983	Alaska, Canada, Central America, CONUS, Mexico
67	NAPARIMA, BWI	Trinidad and Tobago
68	NAHRWAN	Masirah Island (Oman)
69	NAHRWAN	Saudi Arabia
70	NAHRWAN	United Arab Emirates
71	OBSERVATORIO 1966	Corvo and Flores Islands (Azores)
72	OLD EGYPTIAN	Egypt
73	OLD HAWAIIAN	Mean Value
74	OMAN	Oman
75	PICO DE LAS NIEVES	Canary Islands
76	PITCAIRN ASTRO 1967	Pitcairn Island
77	PUERTO RICO	Puerto Rico, Virgin Islands
78	QATAR NATIONAL	Qatar
79	QORNOQ	South Greenland
80	REUNION	Mascarene Island
81	ROME 1940	Sardinia Island
82	RT 90	Sweden
83	PROVISIONAL SOUTH AMERICAN 1956	Bolivia, Chile, Colombia, Ecuador, Guyana, Peru, Venezuela

Rikaline Marketing Corp. 5F-1, 125, Roosevelt Road, Sec. 5, Taipei, Taiwan 116
Tel: ++886 2 2934 5456 Fax: ++886 2 2934 4373 E-Mail: info@rikaline.com.tw Web: www.rikaline.com.tw

84	SOUTH AMERICAN 1969	Argentina, Bolivia, Brazil, Chile, Colombia, Ecuador, Guyana, Paraguay, Peru, Venezuela, Trinidad and Tobago
85	SOUTH ASIA	Singapore
86	PROVISIONAL SOUTH CHILEAN 1963	South Chile
87	SANTO (DOS)	Espirito Santo Island
88	SAO BRAZ	Sao Miguel, Santa Maria Islands (Azores)
89	SAPPER HILL1943	East Falkland Island
90	SCHWARZECK	Namibia
91	SOUTHEAST BASE	Porto Santo and Madeira Islands
92	SOUTHWEST BASE	Faial, Graciosa, Pico, Sao Jorge, and Terceira Islands (Azores)
93	TIMBALAI 1948	Brunei and East Malaysia (Sarawak and Sabah)
94	TOKYO	Japan, Korea, Okinawa
95	TRISTAN ASTRO 1968	Tristan da Cunha
96	USER DEFINED EARTH DATUM	
97	VITI LEVU 1916	Viti Levu Island (Fiji Islands)
98	WAKE-ENIWETOK 1960	Marshall Islands
99	WORLD GEODETIC SYSTEM 1972	
100	WORLD GEODETIC SYSTEM 1984	
101	ZANDERIJ	Surinam
102	CH-1903	Switzerland
103	HU-TZU	Shan
104	INDONESIA 74	
105	AUSTRIA	
106	POTSDAM	
107	TAIWAN	(Modified Hu-Tzu-Shan)

Rikaline Marketing Corp. 5F-1, 125, Roosevelt Road, Sec. 5, Taipei, Taiwan 116
Tel: ++886 2 2934 5456 Fax: ++886 2 2934 4373 E-Mail: info@rikaline.com.tw Web: www.rikaline.com.tw

6. Ordering Information

6.1 Products Options
6.1.1 GPS Receiver Module
GPS-22

6.2 Accessories
A-10302-F FHL, Active Antenna, 2M
A-10305-F FHL, Active Antenna, 5M

6.3 Other Products
CF GPS: GPS-6020
GPS Receiver: GPS-6010, GPS-6010, E-705 (EM-9090)

7. Warranty

The GPS-22 series products are warranted to be free from defects in material and functions for one year from the date of purchase. Any failure of this product within this period under normal conditions will be replaced art no charge to the customers.

Rikaline Marketing Corp. 5F-1, 125, Roosevelt Road, Sec. 5, Taipei, Taiwan 116
Tel: ++886 2 2934 5456 Fax: ++886 2 2934 4373 E-Mail: info@rikaline.com.tw Web: www.rikaline.com.tw