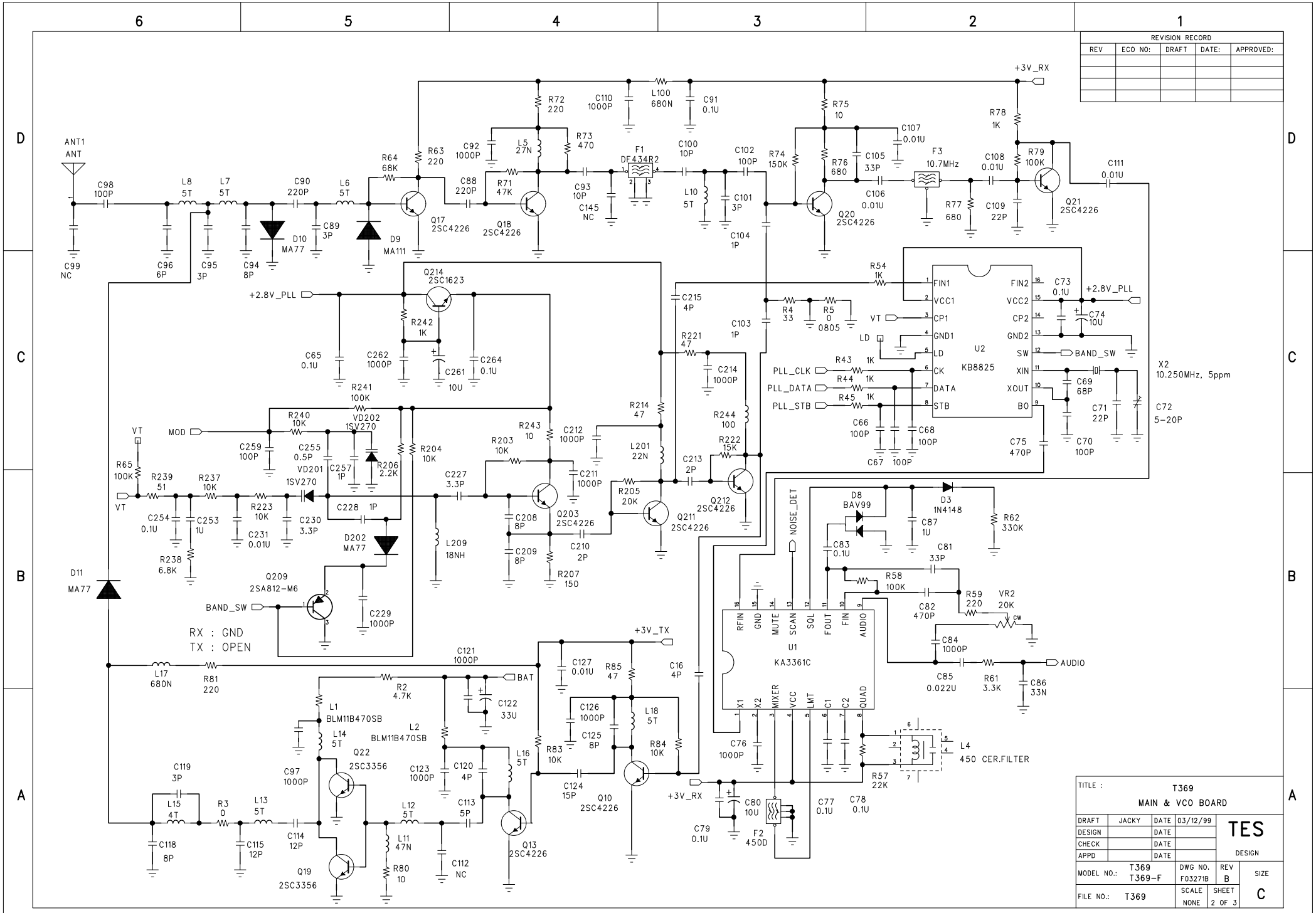
REVISION RECORD
REV
ECO NO:
DRAFT
DATE:
APPROVED:
+3V_RX
ANT1
ANT
C98 100P
L8 5T
L7 5T
C90 220P
L6 5T
C99 NC
C96 6P
C95 3P
C94 8P
D10 MA77
C89 3P
D9 MA111
R64 68K
R63 220
Q17 2SC4226
C88 220P
R71 47K
Q18 2SC4226
C92 1000P
L5 27N
R72 220
R73 470
C93 10P
C145 NC
C110 1000P
L100 680N
C91 0.1U
F1 DF434R2
C100 10P
L10 5T
C101 3P
C104 1P
C102 100P
R74 150K
R75 10
R76 680
Q20 2SC4226
C105 33P
C107 0.01U
C106 0.01U
F3 10.7MHz
R77 680
C108 0.01U
C109 22P
R78 1K
R79 100K
Q21 2SC4226
C111 0.01U
Q214 2SC1623
+2.8V_PLL
R242 1K
C65 0.1U
C262 1000P
C261 10U
C264 0.1U
R54 1K
R4 33
R5 0 0805
VT
LD
U2
KB8825
FIN1
VCC1
CP1
GND1
LD
CK
DATA
STB
FIN2
VCC2
CP2
GND2
SW
XIN
XOUT
BO
C73 0.1U
C74 10U
BAND_SW
PLL_CLK
PLL_DATA
PLL_STB
R43 1K
R44 1K
R45 1K
C66 100P
C67 100P
C68 100P
C69 68P
C70 100P
C71 22P
C72 5-20P
C75 470P
X2 10.250MHz, 5ppm
C215 4P
C103 1P
R221 47
C214 1000P
R214 47
R244 100
R222 15K
C213 2P
Q212 2SC4226
R241 100K
R240 10K
VD202 1SV270
MOD
C259 100P
C255 0.5P
C257 1P
R206 2.2K
R204 10K
R243 10
C212 1000P
R203 10K
C211 1000P
L201 22N
R205 20K
Q211 2SC4226
R65 100K
R239 51
R237 10K
R223 10K
VD201 1SV270
C227 3.3P
C228 1P
C254 0.1U
C253 1U
C231 0.01U
C230 3.3P
D202 MA77
R238 6.8K
L209 18NH
C208 8P
Q203 2SC4226
C209 8P
C210 2P
R207 150
D11 MA77
Q209 2SA812-M6
BAND_SW
C229 1000P
RX : GND
TX : OPEN
NOISE_DET
D8 BAV99
D3 1N4148
C87 1U
R62 330K
C83 0.1U
C81 33P
R58 100K
C82 470P
R59 220
VR2 20K
CW
C84 1000P
C85 0.022U
R61 3.3K
C86 33N
AUDIO
U1
KA3361C
RFIN
GND
MUTE
SCAN
SQL
FOUT
FIN
AUDIO
X1
X2
MIXER
VCC
LMT
C1
C2
QUAD
C76 1000P
L4 450 CER.FILTER
R57 22K
+3V_TX
C121 1000P
C127 0.01U
R85 47
C16 4P
L17 680N
R81 220
R2 4.7K
BAT
C122 33U
L1 BLM11B470SB
L2 BLM11B470SB
L14 5T
Q22 2SC3356
C126 1000P
C125 8P
L18 5T
R84 10K
R83 10K
L16 5T
C119 3P
C97 1000P
C123 1000P
C120 4P
C124 15P
Q10 2SC4226
L15 4T
R3 0
L13 5T
C114 12P
L12 5T
C113 5P
Q13 2SC4226
C118 8P
C115 12P
Q19 2SC3356
L11 47N
R80 10
C112 NC
C79 0.1U
C80 10U
F2 450D
C77 0.1U
C78 0.1U
TITLE :
T369
MAIN & VCO BOARD
DRAFT
JACKY
DATE
03/12/99
DESIGN
CHECK
APPD
TES
DESIGN
MODEL NO.:
T369
T369-F
DWG NO.
F03271B
REV
B
SIZE
C
FILE NO.:
T369
SCALE
NONE
SHEET
2 OF 3