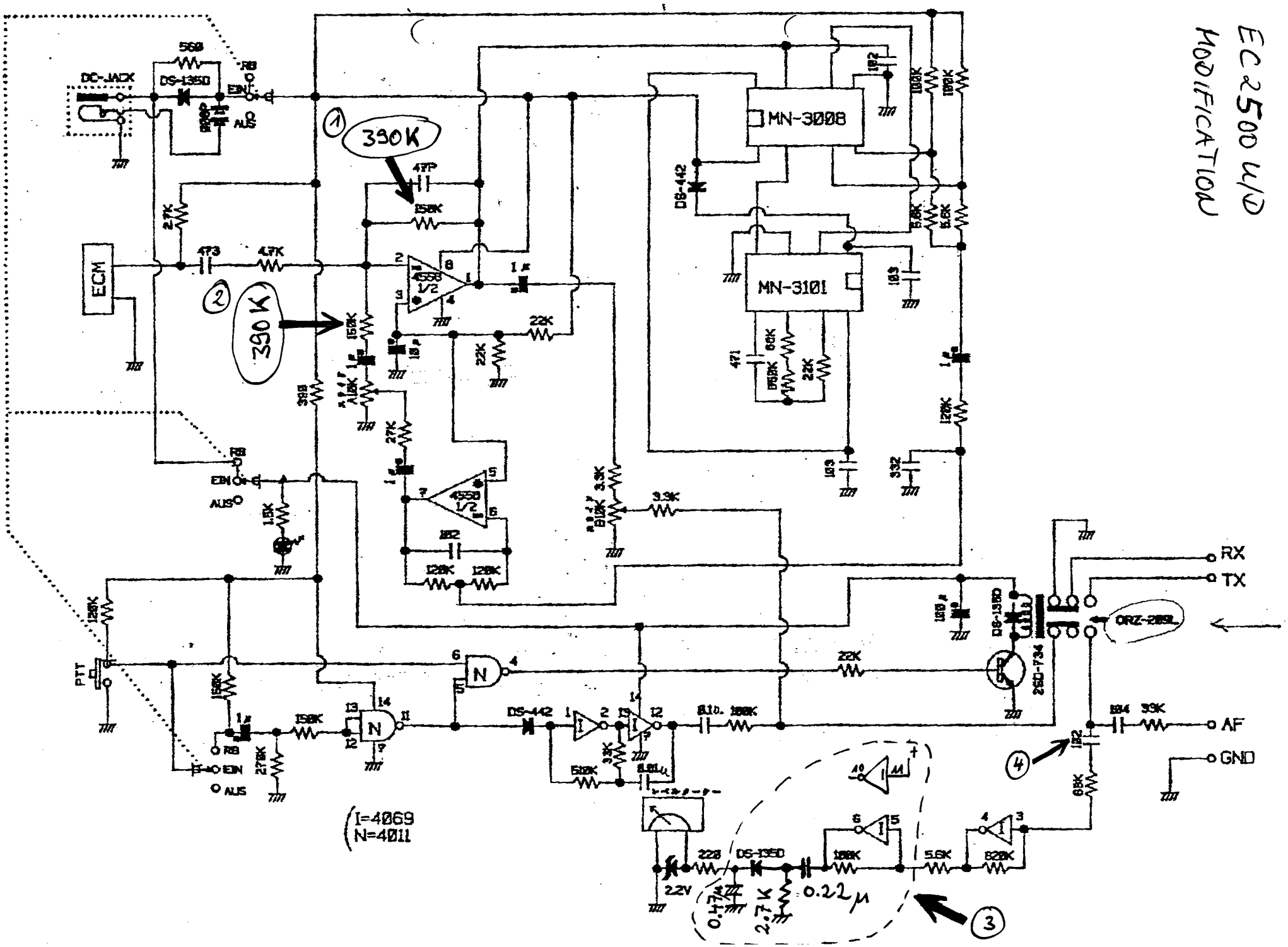EC2500 U/D
MODIFICATION