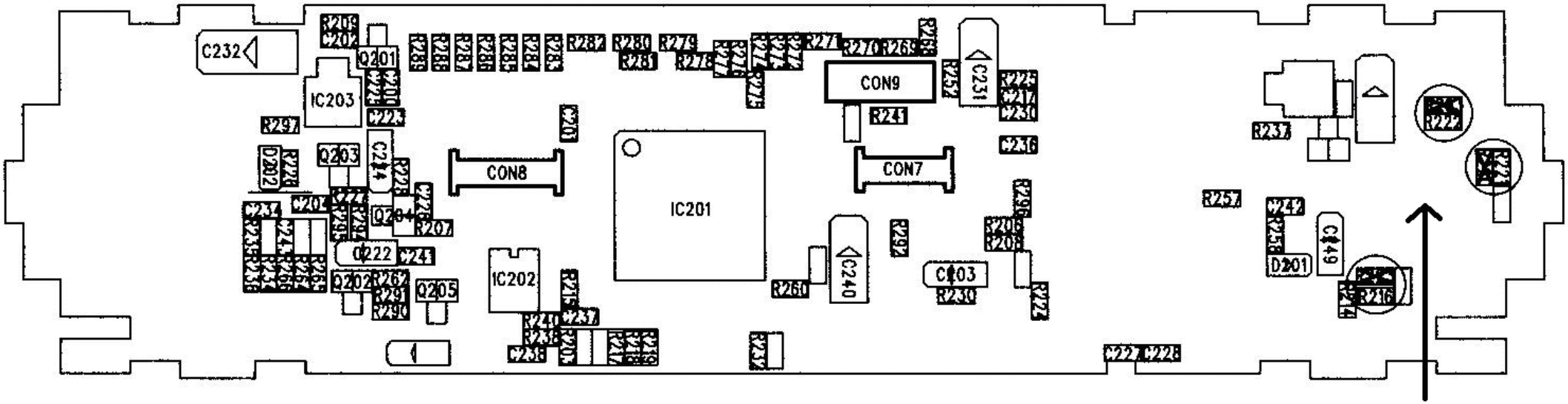

AE540 N "economy" version
Modification for use of DTMF Mic

R293 Delete
R222 ADD

R220 Delete
R221 ADD

R223 Delete
R216 ADD

all resistors = 0 Ohms
only shifting to new
position necessary