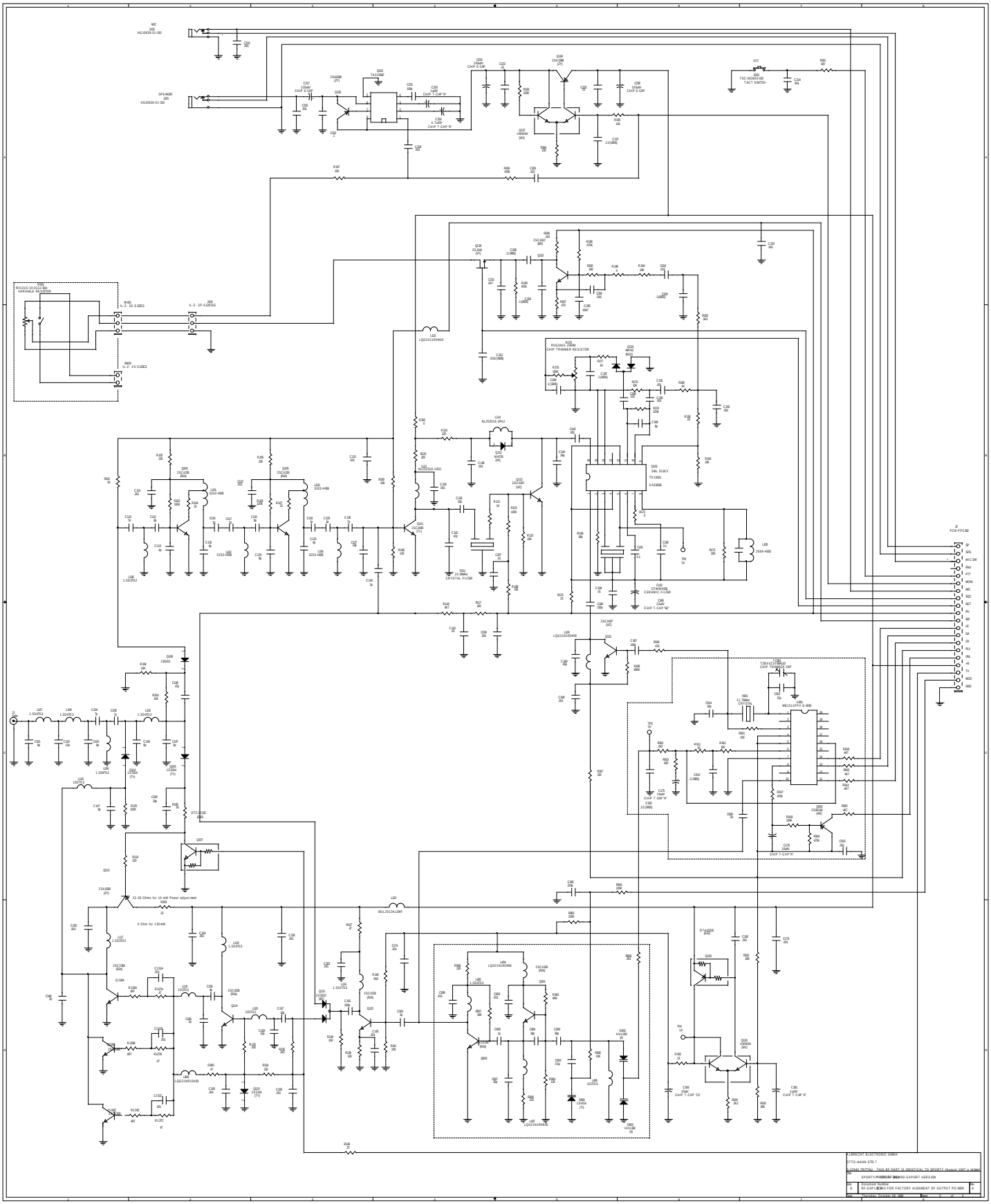
MIC
HS20030-01-000
SPEAKER
HS20030-01-000
PTT
TSC-06180S-00
TACT SWITCH
TK11160D
MB15E07SL
MB15A01CV-K-END
TK10601
KA3361B
CF-CRYSTAL FILTER
CFWM455E
CERAMIC FILTER
RV12S6-10-0121-B4
VARIABLE RESISTOR
IL-Z-20-S-10SC3
IL-Z-10-S-10SC4
IL-Z-20-S-10SC3
LQG21CZ10NK00
LQG21N1R0K00
LQG21N10NK00
LQG21N1R5K00
LQG21N1R8K00
LQG21N2R2K00
LQG21N3R3K00
NLS2010-1R0J
NLS2010-1R5J
NLS2010-2R2J
NLS2010-3R3J
NLS2010-4R0J
NLS2010-4R5J
NLS2010-6R0J
NLS2010-8R2J
NLS2010-10J
NLS2010-12J
NLS2010-15J
NLS2010-18J
NLS2010-22J
NLS2010-27J
NLS2010-33J
NLS2010-39J
NLS2010-47J
NLS2010-56J
NLS2010-68J
NLS2010-82J
NLS2010-100J
NLS2010-120J
NLS2010-150J
NLS2010-180J
NLS2010-220J
NLS2010-270J
NLS2010-330J
NLS2010-390J
NLS2010-470J
NLS2010-560J
NLS2010-680J
NLS2010-820J
NLS2010-1000J
NLS2010-1200J
NLS2010-1500J
NLS2010-1800J
NLS2010-2200J
NLS2010-2700J
NLS2010-3300J
NLS2010-3900J
NLS2010-4700J
NLS2010-5600J
NLS2010-6800J
NLS2010-8200J
NLS2010-10000J
NLS2010-12000J
NLS2010-15000J
NLS2010-18000J
NLS2010-22000J
NLS2010-27000J
NLS2010-33000J
NLS2010-39000J
NLS2010-47000J
NLS2010-56000J
NLS2010-68000J
NLS2010-82000J
NLS2010-100000J
NLS2010-120000J
NLS2010-150000J
NLS2010-180000J
NLS2010-220000J
NLS2010-270000J
NLS2010-330000J
NLS2010-390000J
NLS2010-470000J
NLS2010-560000J
NLS2010-680000J
NLS2010-820000J
NLS2010-1000000J
NLS2010-1200000J
NLS2010-1500000J
NLS2010-1800000J
NLS2010-2200000J
NLS2010-2700000J
NLS2010-3300000J
NLS2010-3900000J
NLS2010-4700000J
NLS2010-5600000J
NLS2010-6800000J
NLS2010-8200000J
NLS2010-10000000J
NLS2010-12000000J
NLS2010-15000000J
NLS2010-18000000J
NLS2010-22000000J
NLS2010-27000000J
NLS2010-33000000J
NLS2010-39000000J
NLS2010-47000000J
NLS2010-56000000J
NLS2010-68000000J
NLS2010-82000000J
NLS2010-100000000J
NLS2010-120000000J
NLS2010-150000000J
NLS2010-180000000J
NLS2010-220000000J
NLS2010-270000000J
NLS2010-330000000J
NLS2010-390000000J
NLS2010-470000000J
NLS2010-560000000J
NLS2010-680000000J
NLS2010-820000000J
NLS2010-1000000000J
NLS2010-1200000000J
NLS2010-1500000000J
NLS2010-1800000000J
NLS2010-2200000000J
NLS2010-2700000000J
NLS2010-3300000000J
NLS2010-3900000000J
NLS2010-4700000000J
NLS2010-5600000000J
NLS2010-6800000000J
NLS2010-8200000000J
NLS2010-10000000000J
NLS2010-12000000000J
NLS2010-15000000000J
NLS2010-18000000000J
NLS2010-22000000000J
NLS2010-27000000000J
NLS2010-33000000000J
NLS2010-39000000000J
NLS2010-47000000000J
NLS2010-56000000000J
NLS2010-68000000000J
NLS2010-82000000000J
NLS2010-100000000000J
NLS2010-120000000000J
NLS2010-150000000000J
NLS2010-180000000000J
NLS2010-220000000000J
NLS2010-270000000000J
NLS2010-330000000000J
NLS2010-390000000000J
NLS2010-470000000000J
NLS2010-560000000000J
NLS2010-680000000000J
NLS2010-820000000000J
NLS2010-1000000000000J
NLS2010-1200000000000J
NLS2010-1500000000000J
NLS2010-1800000000000J
NLS2010-2200000000000J
NLS2010-2700000000000J
NLS2010-3300000000000J
NLS2010-3900000000000J
NLS2010-4700000000000J
NLS2010-5600000000000J
NLS2010-6800000000000J
NLS2010-8200000000000J
NLS2010-10000000000000J
NLS2010-12000000000000J
NLS2010-15000000000000J
NLS2010-18000000000000J
NLS2010-22000000000000J
NLS2010-27000000000000J
NLS2010-33000000000000J
NLS2010-39000000000000J
NLS2010-47000000000000J
NLS2010-56000000000000J
NLS2010-68000000000000J
NLS2010-82000000000000J
NLS2010-100000000000000J
NLS2010-120000000000000J
NLS2010-150000000000000J
NLS2010-180000000000000J
NLS2010-220000000000000J
NLS2010-270000000000000J
NLS2010-330000000000000J
NLS2010-390000000000000J
NLS2010-470000000000000J
NLS2010-560000000000000J
NLS2010-680000000000000J
NLS2010-820000000000000J
NLS2010-1000000000000000J
NLS2010-1200000000000000J
NLS2010-1500000000000000J
NLS2010-1800000000000000J
NLS2010-2200000000000000J
NLS2010-2700000000000000J
NLS2010-3300000000000000J
NLS2010-3900000000000000J
NLS2010-4700000000000000J
NLS2010-5600000000000000J
NLS2010-6800000000000000J
NLS2010-8200000000000000J
NLS2010-10000000000000000J
NLS2010-12000000000000000J
NLS2010-15000000000000000J
NLS2010-18000000000000000J
NLS2010-22000000000000000J
NLS2010-27000000000000000J
NLS2010-33000000000000000J
NLS2010-39000000000000000J
NLS2010-47000000000000000J
NLS2010-56000000000000000J
NLS2010-68000000000000000J
NLS2010-82000000000000000J
NLS2010-100000000000000000J
NLS2010-120000000000000000J
NLS2010-150000000000000000J
NLS2010-180000000000000000J
NLS2010-220000000000000000J
NLS2010-270000000000000000J
NLS2010-330000000000000000J
NLS2010-390000000000000000J
NLS2010-470000000000000000J
NLS2010-560000000000000000J
NLS2010-680000000000000000J
NLS2010-820000000000000000J
NLS2010-1000000000000000000J
NLS2010-1200000000000000000J
NLS2010-1500000000000000000J
NLS2010-1800000000000000000J
NLS2010-2200000000000000000J
NLS2010-2700000000000000000J
NLS2010-3300000000000000000J
NLS2010-3900000000000000000J
NLS2010-4700000000000000000J
NLS2010-5600000000000000000J
NLS2010-6800000000000000000J
NLS2010-8200000000000000000J
NLS2010-10000000000000000000J
NLS2010-12000000000000000000J
NLS2010-15000000000000000000J
NLS2010-18000000000000000000J
NLS2010-22000000000000000000J
NLS2010-27000000000000000000J
NLS2010-33000000000000000000J
NLS2010-39000000000000000000J
NLS2010-47000000000000000000J
NLS2010-56000000000000000000J
NLS2010-68000000000000000000J
NLS2010-82000000000000000000J
NLS2010-100000000000000000000J
NLS2010-120000000000000000000J
NLS2010-150000000000000000000J
NLS2010-180000000000000000000J
NLS2010-220000000000000000000J
NLS2010-270000000000000000000J
NLS2010-330000000000000000000J
NLS2010-390000000000000000000J
NLS2010-470000000000000000000J
NLS2010-560000000000000000000J
NLS2010-680000000000000000000J
NLS2010-820000000000000000000J
NLS2010-1000000000000000000000J
NLS2010-1200000000000000000000J
NLS2010-1500000000000000000000J
NLS2010-1800000000000000000000J
NLS2010-2200000000000000000000J
NLS2010-2700000000000000000000J
NLS2010-3300000000000000000000J
NLS2010-3900000000000000000000J
NLS2010-4700000000000000000000J
NLS2010-5600000000000000000000J
NLS2010-6800000000000000000000J
NLS2010-8200000000000000000000J
NLS2010-10000000000000000000000J
NLS2010-12000000000000000000000J
NLS2010-15000000000000000000000J
NLS2010-18000000000000000000000J
NLS2010-22000000000000000000000J
NLS2010-27000000000000000000000J
NLS2010-33000000000000000000000J
NLS2010-39000000000000000000000J
NLS2010-47000000000000000000000J
NLS2010-56000000000000000000000J
NLS2010-68000000000000000000000J
NLS2010-82000000000000000000000J
NLS2010-100000000000000000000000J
NLS2010-120000000000000000000000J
NLS2010-150000000000000000000000J
NLS2010-180000000000000000000000J
NLS2010-220000000000000000000000J
NLS2010-270000000000000000000000J
NLS2010-330000000000000000000000J
NLS2010-390000000000000000000000J
NLS2010-470000000000000000000000J
NLS2010-560000000000000000000000J
NLS2010-680000000000000000000000J
NLS2010-820000000000000000000000J
NLS2010-1000000000000000000000000J
NLS2010-1200000000000000000000000J
NLS2010-1500000000000000000000000J
NLS2010-1800000000000000000000000J
NLS2010-2200000000000000000000000J
NLS2010-2700000000000000000000000J
NLS2010-3300000000000000000000000J
NLS2010-3900000000000000000000000J
NLS2010-4700000000000000000000000J
NLS2010-5600000000000000000000000J
NLS2010-6800000000000000000000000J
NLS2010-8200000000000000000000000J
NLS2010-10000000000000000000000000J
NLS2010-12000000000000000000000000J
NLS2010-15000000000000000000000000J
NLS2010-18000000000000000000000000J
NLS2010-22000000000000000000000000J
NLS2010-27000000000000000000000000J
NLS2010-33000000000000000000000000J
NLS2010-39000000000000000000000000J
NLS2010-47000000000000000000000000J
NLS2010-56000000000000000000000000J
NLS2010-68000000000000000000000000J
NLS2010-82000000000000000000000000J
NLS2010-100000000000000000000000000J
NLS2010-120000000000000000000000000J
NLS2010-150000000000000000000000000J
NLS2010-180000000000000000000000000J
NLS2010-220000000000000000000000000J
NLS2010-270000000000000000000000000J
NLS2010-330000000000000000000000000J
NLS2010-390000000000000000000000000J
NLS2010-470000000000000000000000000J
NLS2010-560000000000000000000000000J
NLS2010-680000000000000000000000000J
NLS2010-820000000000000000000000000J
NLS2010-1000000000000000000000000000J
NLS2010-1200000000000000000000000000J
NLS2010-1500000000000000000000000000J
NLS2010-1800000000000000000000000000J
NLS2010-2200000000000000000000000000J
NLS2010-2700000000000000000000000000J
NLS2010-3300000000000000000000000000J
NLS2010-3900000000000000000000000000J
NLS2010-4700000000000000000000000000J
NLS2010-5600000000000000000000000000J
NLS2010-6800000000000000000000000000J
NLS2010-8200000000000000000000000000J
NLS2010-10000000000000000000000000000J
NLS2010-12000000000000000000000000000J
NLS2010-15000000000000000000000000000J
NLS2010-18000000000000000000000000000J
NLS2010-22000000000000000000000000000J
NLS2010-27000000000000000000000000000J
NLS2010-33000000000000000000000000000J
NLS2010-39000000000000000000000000000J
NLS2010-47000000000000000000000000000J
NLS2010-56000000000000000000000000000J
NLS2010-68000000000000000000000000000J
NLS2010-82000000000000000000000000000J
NLS2010-100000000000000000000000000000J
NLS2010-120000000000000000000000000000J
NLS2010-150000000000000000000000000000J
NLS2010-180000000000000000000000000000J
NLS2010-220000000000000000000000000000J
NLS2010-270000000000000000000000000000J
NLS2010-330000000000000000000000000000J
NLS2010-390000000000000000000000000000J
NLS2010-470000000000000000000000000000J
NLS2010-560000000000000000000000000000J
NLS2010-680000000000000000000000000000J
NLS2010-820000000000000000000000000000J
NLS2010-1000000000000000000000000000000J
NLS2010-1200000000000000000000000000000J
NLS2010-1500000000000000000000000000000J
NLS2010-1800000000000000000000000000000J
NLS2010-2200000000000000000000000000000J
NLS2010-2700000000000000000000000000000J
NLS2010-3300000000000000000000000000000J
NLS2010-3900000000000000000000000000000J
NLS2010-4700000000000000000000000000000J
NLS2010-5600000000000000000000000000000J
NLS2010-6800000000000000000000000000000J
NLS2010-8200000000000000000000000000000J
NLS2010-10000000000000000000000000000000J
NLS2010-12000000000000000000000000000000J
NLS2010-15000000000000000000000000000000J
NLS2010-18000000000000000000000000000000J
NLS2010-22000000000000000000000000000000J
NLS2010-27000000000000000000000000000000J
NLS2010-33000000000000000000000000000000J
NLS2010-39000000000000000000000000000000J
NLS2010-47000000000000000000000000000000J
NLS2010-56000000000000000000000000000000J
NLS2010-68000000000000000000000000000000J
NLS2010-82000000000000000000000000000000J
NLS2010-100000000000000000000000000000000J
NLS2010-120000000000000000000000000000000J
NLS2010-150000000000000000000000000000000J
NLS2010-180000000000000000000000000000000J
NLS2010-220000000000000000000000000000000J
NLS2010-270000000000000000000000000000000J
NLS2010-330000000000000000000000000000000J
NLS2010-390000000000000000000000000000000J
NLS2010-470000000000000000000000000000000J
NLS2010-560000000000000000000000000000000J
NLS2010-680000000000000000000000000000000J
NLS2010-820000000000000000000000000000000J
NLS2010-1000000000000000000000000000000000J
NLS2010-1200000000000000000000000000000000J
NLS2010-1500000000000000000000000000000000J
NLS2010-1800000000000000000000000000000000J
NLS2010-2200000000000000000000000000000000J
NLS2010-2700000000000000000000000000000000J
NLS2010-3300000000000000000000000000000000J
NLS2010-3900000000000000000000000000000000J
NLS2010-4700000000000000000000000000000000J
NLS2010-5600000000000000000000000000000000J
NLS2010-6800000000000000000000000000000000J
NLS2010-8200000000000000000000000000000000J
NLS2010-10000000000000000000000000000000000J
NLS2010-12000000000000000000000000000000000J
NLS2010-15000000000000000000000000000000000J
NLS2010-18000000000000000000000000000000000J
NLS2010-22000000000000000000000000000000000J
NLS2010-27000000000000000000000000000000000J
NLS2010-33000000000000000000000000000000000J
NLS2010-39000000000000000000000000000000000J
NLS2010-47000000000000000000000000000000000J
NLS2010-56000000000000000000000000000000000J
NLS2010-68000000000000000000000000000000000J
NLS2010-82000000000000000000000000000000000J
NLS2010-100000000000000000000000000000000000J
NLS2010-120000000000000000000000000000000000J
NLS2010-150000000000000000000000000000000000J
NLS2010-180000000000000000000000000000000000J
NLS2010-220000000000000000000000000000000000J
NLS2010-270000000000000000000000000000000000J
NLS2010-330000000000000000000000000000000000J
NLS2010-390000000000000000000000000000000000J
NLS2010-470000000000000000000000000000000000J
NLS2010-560000000000000000000000000000000000J
NLS2010-680000000000000000000000000000000000J
NLS2010-820000000000000000000000000000000000J
NLS2010-1000000000000000000000000000000000000J
NLS2010-1200000000000000000000000000000000000J
NLS2010-1500000000000000000000000000000000000J
NLS2010-1800000000000000000000000000000000000J
NLS2010-2200000000000000000000000000000000000J
NLS2010-2700000000000000000000000000000000000J
NLS2010-3300000000000000000000000000000000000J
NLS2010-3900000000000000000000000000000000000J
NLS2010-4700000000000000000000000000000000000J
NLS2010-5600000000000000000000000000000000000J
NLS2010-6800000000000000000000000000000000000J
NLS2010-8200000000000000000000000000000000000J
NLS2010-10000000000000000000000000000000000000J
NLS2010-12000000000000000000000000000000000000J
NLS2010-15000000000000000000000000000000000000J
NLS2010-18000000000000000000000000000000000000J
NLS2010-22000000000000000000000000000000000000J
NLS2010-27000000000000000000000000000000000000J
NLS2010-33000000000000000000000000000000000000J
NLS2010-39000000000000000000000000000000000000J
NLS2010-47000000000000000000000000000000000000J
NLS2010-56000000000000000000000000000000000000J
NLS2010-68000000000000000000000000000000000000J
NLS2010-82000000000000000000000000000000000000J
NLS2010-100000000000000000000000000000000000000J
NLS2010-120000000000000000000000000000000000000J
NLS2010-150000000000000000000000000000000000000J
NLS2010-180000000000000000000000000000000000000J
NLS2010-220000000000000000000000000000000000000J
NLS2010-270000000000000000000000000000000000000J
NLS2010-330000000000000000000000000000000000000J
NLS2010-390000000000000000000000000000000000000J
NLS2010-470000000000000000000000000000000000000J
NLS2010-560000000000000000000000000000000000000J
NLS2010-680000000000000000000000000000000000000J
NLS2010-820000000000000000000000000000000000000J
NLS2010-1000000000000000000000000000000000000000J
NLS2010-1200000000000000000000000000000000000000J
NLS2010-1500000000000000000000000000000000000000J
NLS2010-1800000000000000000000000000000000000000J
NLS2010-2200000000000000000000000000000000000000J
NLS2010-2700000000000000000000000000000000000000J
NLS2010-3300000000000000000000000000000000000000J
NLS2010-3900000000000000000000000000000000000000J
NLS2010-4700000000000000000000000000000000000000J
NLS2010-5600000000000000000000000000000000000000J
NLS2010-6800000000000000000000000000000000000000J
NLS2010-8200000000000000000000000000000000000000J
NLS2010-10000000000000000000000000000000000000000J
NLS2010-12000000000000000000000000000000000000000J
NLS2010-15000000000000000000000000000000000000000J
NLS2010-18000000000000000000000000000000000000000J
NLS2010-22000000000000000000000000000000000000000J
NLS2010-27000000000000000000000000000000000000000J
NLS2010-33000000000000000000000000000000000000000J
NLS2010-39000000000000000000000000000000000000000J
NLS2010-47000000000000000000000000000000000000000J
NLS2010-56000000000000000000000000000000000000000J
NLS2010-68000000000000000000000000000000000000000J
NLS2010-82000000000000000000000000000000000000000J
NLS2010-100000000000000000000000000000000000000000J
NLS2010-120000000000000000000000000000000000000000J
NLS2010-150000000000000000000000000000000000000000J
NLS2010-180000000000000000000000000000000000000000J
NLS2010-220000000000000000000000000000000000000000J
NLS2010-270000000000000000000000000000000000000000J
NLS2010-330000000000000000000000000000000000000000J
NLS2010-390000000000000000000000000000000000000000J
NLS2010-470000000000000000000000000000000000000000J
NLS2010-560000000000000000000000000000000000000000J
NLS2010-680000000000000000000000000000000000000000J
NLS2010-820000000000000000000000000000000000000000J
NLS2010-1000000000000000000000000000000000000000000J
NLS2010-1200000000000000000000000000000000000000000J
NLS2010-1500000000000000000000000000000000000000000J
NLS2010-1800000000000000000000000000000000000000000J
NLS2010-2200000000000000000000000000000000000000000J
NLS2010-2700000000000000000000000000000000000000000J
NLS2010-3300000000000000000000000000000000000000000J
NLS2010-3900000000000000000000000000000000000000000J
NLS2010-4700000000000000000000000000000000000000000J
NLS2010-5600000000000000000000000000000000000000000J
NLS2010-6800000000000000000000000000000000000000000J
NLS2010-8200000000000000000000000000000000000000000J
NLS2010-10000000000000000000000000000000000000000000J
NLS2010-12000000000000000000000000000000000000000000J
NLS2010-15000000000000000000000000000000000000000000J
NLS2010-18000000000000000000000000000000000000000000J
NLS2010-22000000000000000000000000000000000000000000J
NLS2010-27000000000000000000000000000000000000000000J
NLS2010-33000000000000000000000000000000000000000000J
NLS2010-39000000000000000000000000000000000000000000J
NLS2010-47000000000000000000000000000000000000000000J
NLS2010-56000000000000000000000000000000000000000000J
NLS2010-68000000000000000000000000000000000000000000J
NLS2010-82000000000000000000000000000000000000000000J
NLS2010-100000000000000000000000000000000000000000000J
NLS2010-120000000000000000000000000000000000000000000J
NLS2010-150000000000000000000000000000000000000000000J
NLS2010-180000000000000000000000000000000000000000000J
NLS2010-220000000000000000000000000000000000000000000J
NLS2010-270000000000000000000000000000000000000000000J
NLS2010-330000000000000000000000000000000000000000000J
NLS2010-390000000000000000000000000000000000000000000J
NLS2010-470000000000000000000000000000000000000000000J
NLS2010-560000000000000000000000000000000000000000000J
NLS2010-680000000000000000000000000000000000000000000J
NLS2010-820000000000000000000000000000000000000000000J
NLS2010-1000000000000000000000000000000000000000000000J
NLS2010-1200000000000000000000000000000000000000000000J
NLS2010-1500000000000000000000000000000000000000000000J
NLS2010-1800000000000000000000000000000000000000000000J
NLS2010-2200000000000000000000000000000000000000000000J
NLS2010-2700000000000000000000000000000000000000000000J
NLS2010-3300000000000000000000000000000000000000000000J
NLS2010-3900000000000000000000000000000000000000000000J
NLS2010-4700000000000000000000000000000000000000000000J
NLS2010-5600000000000000000000000000000000000000000000J
NLS2010-6800000000000000000000000000000000000000000000J
NLS2010-8200000000000000000000000000000000000000000000J
NLS2010-10000000000000000000000000000000000000000000000J
NLS2010-12000000000000000000000000000000000000000000000J
NLS2010-15000000000000000000000000000000000000000000000J
NLS2010-18000000000000000000000000000000000000000000000J
NLS2010-22000000000000000000000000000000000000000000000J
NLS2010-27000000000000000000000000000000000000000000000J
NLS2010-33000000000000000000000000000000000000000000000J
NLS2010-39000000000000000000000000000000000000000000000J
NLS2010-47000000000000000000000000000000000000000000000J
NLS2010-56000000000000000000000000000000000000000000000J
NLS2010-68000000000000000000000000000000000000000000000J
NLS2010-82000000000000000000000000000000000000000000000J
NLS2010-100000000000000000000000000000000000000000000000J
NLS2010-120000000000000000000000000000000000000000000000J
NLS2010-150000000000000000000000000000000000000000000000J
NLS2010-180000000000000000000000000000000000000000000000J
NLS2010-220000000000000000000000000000000000000000000000J
NLS2010-270000000000000000000000000000000000000000000000J
NLS2010-330000000000000000000000000000000000000000000000J
NLS2010-390000000000000000000000000000000000000000000000J
NLS2010-470000000000000000000000000000000000000000000000J
NLS2010-560000000000000000000000000000000000000000000000J
NLS2010-680000000000000000000000000000000000000000000000J
NLS2010-820000000000000000000000000000000000000000000000J
NLS2010-1000000000000000000000000000000000000000000000000J
NLS2010-1200000000000000000000000000000000000000000000000J
NLS2010-1500000000000000000000000000000000000000000000000J
NLS2010-1800000000000000000000000000000000000000000000000J
NLS2010-2200000000000000000000000000000000000000000000000J
NLS2010-2700000000000000000000000000000000000000000000000J
NLS2010-3300000000000000000000000000000000000000000000000J
NLS2010-3900000000000000000000000000000000000000000000000J
NLS2010-4700000000000000000000000000000000000000000000000J
NLS2010-5600000000000000000000000000000000000000000000000J
NLS2010-6800000000000000000000000000000000000000000000000J
NLS2010-8200000000000000000000000000000000000000000000000J
NLS2010-10000000000000000000000000000000000000000000000000J
NLS2010-12000000000000000000000000000000000000000000000000J
NLS2010-15000000000000000000000000000000000000000000000000J
NLS2010-18000000000000000000000000000000000000000000000000J
NLS2010-22000000000000000000000000000000000000000000000000J
NLS2010-27000000000000000000000000000000000000000000000000J
NLS2010-33000000000000000000000000000000000000000000000000J
NLS2010-39000000000000000000000000000000000000000000000000J
NLS2010-47000000000000000000000000000000000000000000000000J
NLS2010-56000000000000000000000000000000000000000000000000J
NLS2010-68000000000000000000000000000000000000000000000000J
NLS2010-82000000000000000000000000000000000000000000000000J
NLS2010-100000000000000000000000000000000000000000000000000J
NLS2010-120000000000000000000000000000000000000000000000000J
NLS2010-150000000000000000000000000000000000000000000000000J
NLS2010-180000000000000000000000000000000000000000000000000J
NLS2010-220000000000000000000000000000000000000000000000000J
NLS2010-270000000000000000000000000000000000000000000000000J
NLS2010-330000000000000000000000000000000000000000000000000J
NLS2010-390000000000000000000000000000000000000000000000000J
NLS2010-470000000000000000000000000000000000000000000000000J
NLS2010-560000000000000000000000000000000000000000000000000J
NLS2010-680000000000000000000000000000000000000000000000000J
NLS2010-820000000000000000000000000000000000000000000000000J
NLS2010-1000000000000000000000000000000000000000000000000000J
NLS2010-1200000000000000000000000000000000000000000000000000J
NLS2010-1500000000000000000000000000000000000000000000000000J
NLS2010-1800000000000000000000000000000000000000000000000000J
NLS2010-2200000000000000000000000000000000000000000000000000J
NLS2010-2700000000000000000000000000000000000000000000000000J
NLS2010-3300000000000000000000000000000000000000000000000000J
NLS2010-3900000000000000000000000000000000000000000000000000J
NLS2010-4700000000000000000000000000000000000000000000000000J
NLS2010-5600000000000000000000000000000000000000000000000000J
NLS2010-6800000000000000000000000000000000000000000000000000J
NLS2010-8200000000000000000000000000000000000000000000000000J
NLS2010-10000000000000000000000000000000000000000000000000000J
NLS2010-12000000000000000000000000000000000000000000000000000J
NLS2010-15000000000000000000000000000000000000000000000000000J
NLS2010-18000000000000000000000000000000000000000000000000000J
NLS2010-22000000000000000000000000000000000000000000000000000J
NLS2010-27000000000000000000000000000000000000000000000000000J
NLS2010-33000000000000000000000000000000000000000000000000000J
NLS2010-39000000000000000000000000000000000000000000000000000J
NLS2010-47000000000000000000000000000000000000000000000000000J
NLS2010-56000000000000000000000000000000000000000000000000000J
NLS2010-68000000000000000000000000000000000000000000000000000J
NLS2010-82000000000000000000000000000000000000000000000000000J
NLS2010-100000000000000000000000000000000000000000000000000000J
NLS2010-120000000000000000000000000000000000000000000000000000J
NLS2010-150000000000000000000000000000000000000000000000000000J
NLS2010-180000000000000000000000000000000000000000000000000000J
NLS2010-220000000000000000000000000000000000000000000000000000J
NLS2010-270000000000000000000000000000000000000000000000000000J
NLS2010-330000000000000000000000000000000000000000000000000000J
NLS2010-390000000000000000000000000000000000000000000000000000J
NLS2010-470000000000000000000000000000000000000000000000000000J
NLS2010-560000000000000000000000000000000000000000000000000000J
NLS2010-680000000000000000000000000000000000000000000000000000J
NLS2010-820000000000000000000000000000000000000000000000000000J
NLS2010-1000000000000000000000000000000000000000000000000000000J
NLS2010-1200000000000000000000000000000000000000000000000000000J
NLS2010-1500000000000000000000000000000000000000000000000000000J
NLS2010-1800000000000000000000000000000000000000000000000000000J
NLS2010-2200000000000000000000000000000000000000000000000000000J
NLS2010-2700000000000000000000000000000000000000000000000000000J
NLS2010-3300000000000000000000000000000000000000000000000000000J
NLS2010-3900000000000000000000000000000000000000000000000000000J
NLS2010-4700000000000000000000000000000000000000000000000000000J
NLS2010-5600000000000000000000000000000000000000000000000000000J
NLS2010-6800000000000000000000000000000000000000000000000000000J
NLS2010-8200000000000000000000000000000000000000000000000000000J
NLS2010-10000000000000000000000000000000000000000000000000000000J
NLS2010-12000000000000000000000000000000000000000000000000000000J
NLS2010-15000000000000000000000000000000000000000000000000000000J
NLS2010-18000000000000000000000000000000000000000000000000000000J
NLS2010-22000000000000000000000000000000000000000000000000000000J
NLS2010-27000000000000000000000000000000000000000000000000000000J
NLS2010-33000000000000000000000000000000000000000000000000000000J
NLS2010-39000000000000000000000000000000000000000000000000000000J
NLS2010-47000000000000000000000000000000000000000000000000000000J
NLS2010-56000000000000000000000000000000000000000000000000000000J
NLS2010-68000000000000000000000000000000000000000000000000000000J
NLS2010-82000000000000000000000000000000000000000000000000000000J
NLS2010-100000000000000000000000000000000000000000000000000000000J
NLS2010-120000000000000000000000000000000000000000000000000000000J
NLS2010-150000000000000000000000000000000000000000000000000000000J
NLS2010-180000000000000000000000000000000000000000000000000000000J
NLS2010-220000000000000000000000000000000000000000000000000000000J
NLS2010-270000000000000000000000000000000000000000000000000000000J
NLS2010-330000000000000000000000000000000000000000000000000000000J
NLS2010-390000000000000000000000000000000000000000000000000000000J
NLS2010-470000000000000000000000000000000000000000000000000000000J
NLS2010-560000000000000000000000000000000000000000000000000000000J
NLS2010-680000000000000000000000000000000000000000000000000000000J
NLS2010-820000000000000000000000000000000000000000000000000000000J
NLS2010-1000000000000000000000000000000000000000000000000000000000J
NLS2010-1200000000000000000000000000000000000000000000000000000000J
NLS2010-1500000000000000000000000000000000000000000000000000000000J
NLS2010-1800000000000000000000000000000000000000000000000000000000J
NLS2010-2200000000000000000000000000000000000000000000000000000000J
NLS2010-2700000000000000000000000000000000000000000000000000000000J
NLS2010-3300000000000000000000000000000000000000000000000000000000J
NLS2010-3900000000000000000000000000000000000000000000000000000000J
NLS2010-4700000000000000000000000000000000000000000000000000000000J
NLS2010-5600000000000000000000000000000000000000000000000000000000J
NLS2010-6800000000000000000000000000000000000000000000000000000000J
NLS2010-8200000000000000000000000000000000000000000000000000000000J
NLS2010-10000000000000000000000000000000000000000000000000000000000J
NLS2010-12000000000000000000000000000000000000000000000000000000000J
NLS2010-15000000000000000000000000000000000000000000000000000000000J
NLS2010-18000000000000000000000000000000000000000000000000000000000J
NLS2010-22000000000000000000000000000000000000000000000000000000000J
NLS2010-27000000000000000000000000000000000000000000000000000000000J
NLS2010-33000000000000000000000000000000000000000000000000000000000J
NLS2010-39000000000000000000000000000000000000000000000000000000000J
NLS2010-47000000000000000000000000000000000000000000000000000000000J
NLS2010-56000000000000000000000000000000000000000000000000000000000J
NLS2010-68000000000000000000000000000000000000000000000000000000000J
NLS2010-82000000000000000000000000000000000000000000000000000000000J
NLS2010-100000000000000000000000000000000000000000000000000000000000J
NLS2010-120000000000000000000000000000000000000000000000000000000000J
NLS2010-150000000000000000000000000000000000000000000000000000000000J
NLS2010-180000000000000000000000000000000000000000000000000000000000J
NLS2010-220000000000000000000000000000000000000000000000000000000000J
NLS2010-270000000000000000000000000000000000000000000000000000000000J
NLS2010-330000000000000000000000000000000000000000000000000000000000J
NLS2010-390000000000000000000000000000000000000000000000000000000000J
NLS2010-470000000000000000000000000000000000000000000000000000000000J
NLS2010-560000000000000000000000000000000000000000000000000000000000J
NLS2010-680000000000000000000000000000000000000000000000000000000000J
NLS2010-820000000000000000000000000000000000000000000000000000000000J
NLS2010-1000000000000000000000000000000000000000000000000000000000000J
NLS2010-1200000000000000000000000000000000000000000000000000000000000J
NLS2010-1500000000000000000000000000000000000000000000000000000000000J
NLS2010-1800000000000000000000000000000000000000000000000000000000000J
NLS2010-2200000000000000000000000000000000000000000000000000000000000J
NLS2010-2700000000000000000000000000000000000000000000000000000000000J
NLS2010-3300000000000000000000000000000000000000000000000000000000000J
NLS2010-3900000000000000000000000000000000000000000000000000000000000J
NLS2010-4700000000000000000000000000000000000000000000000000000000000J
NLS2010-5600000000000000000000000000000000000000000000000000000000000J
NLS2010-6800000000000000000000000000000000000000000000000000000000000J
NLS2010-8200000000000000000000000000000000000000000000000000000000000J
NLS2010-10000000000000000000000000000000000000000000000000000000000000J
NLS2010-12000000000000000000000000000000000000000000000000000000000000J
NLS2010-15000000000000000000000000000000000000000000000000000000000000J
NLS2010-18000000000000000000000000000000000000000000000000000000000000J
NLS2010-22000000000000000000000000000000000000000000000000000000000000J
NLS2010-27000000000000000000000000000000000000000000000000000000000000J
NLS2010-33000000000000000000000000000000000000000000000000000000000000J
NLS2010-39000000000000000000000000000000000000000000000000000000000000J
NLS2010-47000000000000000000000000000000000000000000000000000000000000J
NLS2010-56000000000000000000000000000000000000000000000000000000000000J
NLS2010-68000000000000000000000000000000000000000000000000000000000000J
NLS2010-82000000000000000000000000000000000000000000000000000000000000J
NLS2010-100000000000000000000000000000000000000000000000000000000000000J
NLS2010-120000000000000000000000000000000000000000000000000000000000000J
NLS2010-150000000000000000000000000000000000000000000000000000000000000J
NLS2010-180000000000000000000000000000000000000000000000000000000000000J
NLS2010-220000000000000000000000000000000000000000000000000000000000000J
NLS2010-270000000000000000000000000000000000000000000000000000000000000J
NLS2010-330000000000000000000000000000000000000000000000000000000000000J
NLS2010-390000000000000000000000000000000000000000000000000000000000000J
NLS2010-470000000000000000000000000000000000000000000000000000000000000J
NLS2010-560000000000000000000000000000000000000000000000000000000000000J
NLS2010-680000000000000000000000000000000000000000000000000000000000000J
NLS2010-820000000000000000000000000000000000000000000000000000000000000J
NLS2010-1000000000000000000000000000000000000000000000000000000000000000J
NLS2010-1200000000000000000000000000000000000000000000000000000000000000J
NLS2010-1500000000000000000000000000000000000000000000000000000000000000J
NLS2010-1800000000000000000000000000000000000000000000000000000000000000J
NLS2010-2200000000000000000000000000000000000000000000000000000000000000J
NLS2010-2700000000000000000000000000000000000000000000000000000000000000J
NLS2010-3300000000000000000000000000000000000000000000000000000000000000J
NLS2010-3900000000000000000000000000000000000000000000000000000000000000J
NLS2010-4700000000000000000000000000000000000000000000000000000000000000J
NLS2010-5600000000000000000000000000000000000000000000000000000000000000J
NLS2010-6800000000000000000000000000000000000000000000000000000000000000J
NLS2010-8200000000000000000000000000000000000000000000000000000000000000J
NLS2010-10000000000000000000000000000000000000000000000000000000000000000J
NLS2010-12000000000000000000000000000000000000000000000000000000000000000J
NLS2010-15000000000000000000000000000000000000000000000000000000000000000J
NLS2010-18000000000000000000000000000000000000000000000000000000000000000J
NLS2010-22000000000000000000000000000000000000000000000000000000000000000J
NLS2010-27000000000000000000000000000000000000000000000000000000000000000J
NLS2010-33000000000000000000000000000000000000000000000000000000000000000J
NLS2010-39000000000000000000000000000000000000000000000000000000000000000J
NLS2010-47000000000000000000000000000000000000000000000000000000000000000J
NLS2010-56000000000000000000000000000000000000000000000000000000000000000J
NLS2010-68000000000000000000000000000000000000000000000000000000000000000J
NLS2010-82000000000000000000000000000000000000000000000000000000000000000J
NLS2010-100000000000000000000000000000000000000000000000000000000000000000J
NLS2010-120000000000000000000000000000000000000000000000000000000000000000J
NLS2010-150000000000000000000000000000000000000000000000000000000000000000J
NLS2010-180000000000000000000000000000000000000000000000000000000000000000J
NLS2010-220000000000000000000000000000000000000000000000000000000000000000J
NLS2010-270000000000000000000000000000000000000000000000000000000000000000J
NLS2010-330000000000000000000000000000000000000000000000000000000000000000J
NLS2010-390000000000000000000000000000000000000000000000000000000000000000J
NLS2010-470000000000000000000000000000000000000000000000000000000000000000J
NLS2010-560000000000000000000000000000000000000000000000000000000000000000J
NLS2010-680000000000000000000000000000000000000000000000000000000000000000J
NLS2010-820000000000000000000000000000000000000000000000000000000000000000J
NLS2010-1000000000000000000000000000000000000000000000000000000000000000000J
NLS2010-1200000000000000000000000000000000000000000000000000000000000000000J
NLS2010-1500000000000000000000000000000000000000000000000000000000000000000J
NLS2010-1800000000000000000000000000000000000000000000000000000000000000000J
NLS2010-2200000000000000000000000000000000000000000000000000000000000000000J
NLS2010-2700000000000000000000000000000000000000000000000000000000000000000J
NLS2010-3300000000000000000000000000000000000000000000000000000000000000000J
NLS2010-3900000000000000000000000000000000000