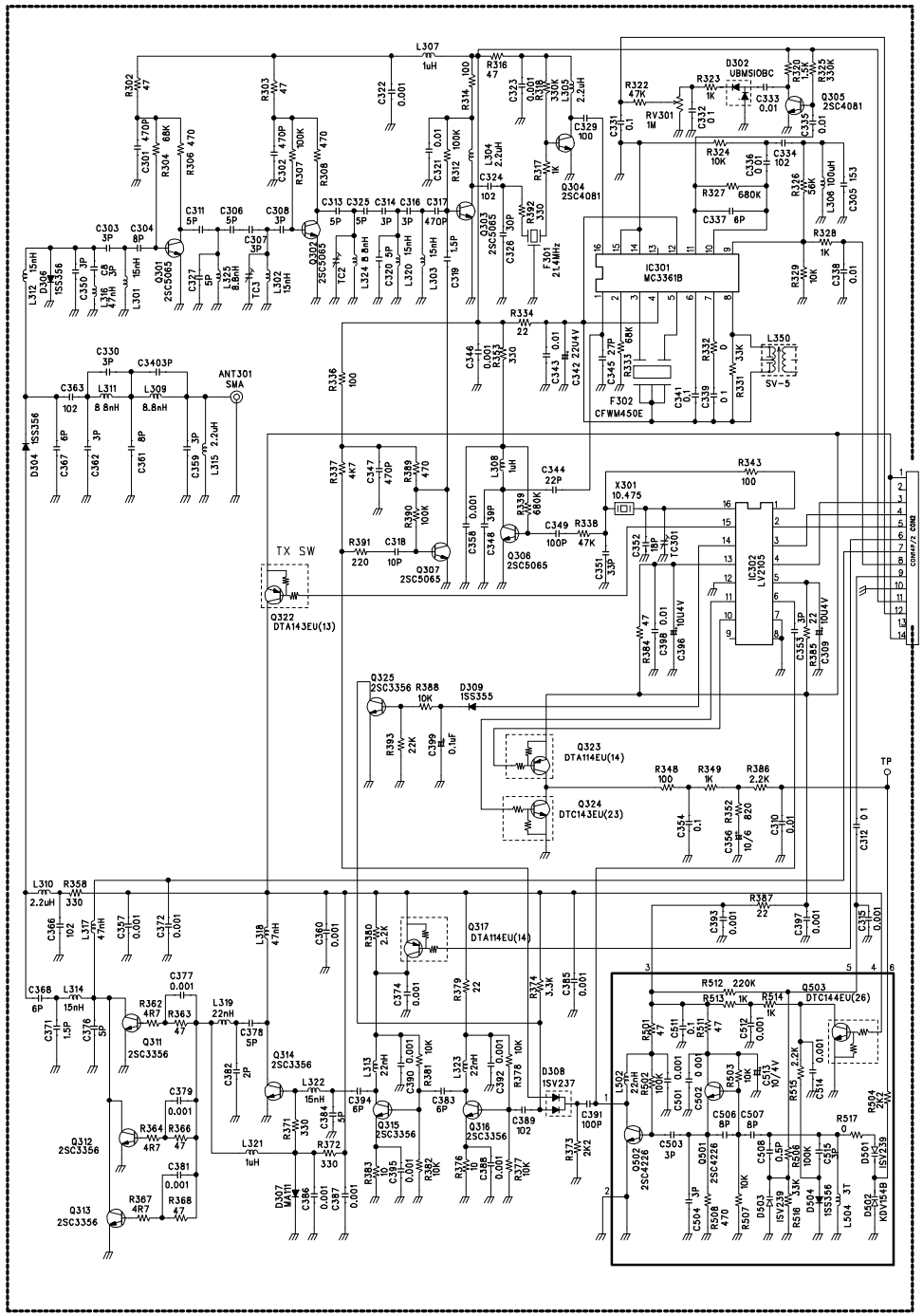
IC301
MC3361B
IC302
LV2105
IC601
AK2341
IC201
UPD75P316B
LCD201
F301
21.4MHz
F302
CFWM450E
X301
10.475
X601
3.6864MHz
ANT301
SMA
TX SW
Q322
DTA143EU(13)
Q323
DTA114EU(14)
Q324
DTC143EU(23)
Q317
DTA114EU(14)
Q503
DTC144EU(26)
Q201
DTA143EU(13)
Q202
A1001(KY)
Q203
DTA114EU(14)
Q206
DTA143EU(13)
Q207
DTA143EU(13)
Q213
DTA143TU(93)
Q214
DTC115TU(09)
Q205
DTC124TU(05)
IC203B
NJM2100E
IC203A
NJM2100E
IC204
IC206
IC207
LM386M
CON202
MIC
J201
JACK
CON203
BATTARY
J202
JACK
SPK1
LED201
CL-181YG
REMARKS FOR EXPORT ONLY
* DELETE R285 FOR Hi/LO SWITCHING
* R202 FOR BASIC FUNCTIONS
* R223 FOR EXTENDED FUNCTIONS
** DELETE R217 FOR 138 CHANNELS
** CH CONTR
CTCSS OPTION
NOTE 1:
MODE SWITCHING (OPTIONS)
R 202 added, R 223 deleted
BASIC FUNCTIONS + :
SCAN
AUTO POWER OFF (APO)
BATTERY VOLTAGE DISPLAY
MEMORY STORE & RECALL
R 202 deleted, R 223 added
BASIC FUNCTIONS ONLY
SEUNG YONG ELECTRONICS LTD.
LOW POWER DEVICE 433 MHz
EXPORT VERSION FOR RADIOAMATEURS ONLY
DRAWING-NO: LPD-EX1.SCH
SEPT 1997