SCHEMATIC DIAGRAM

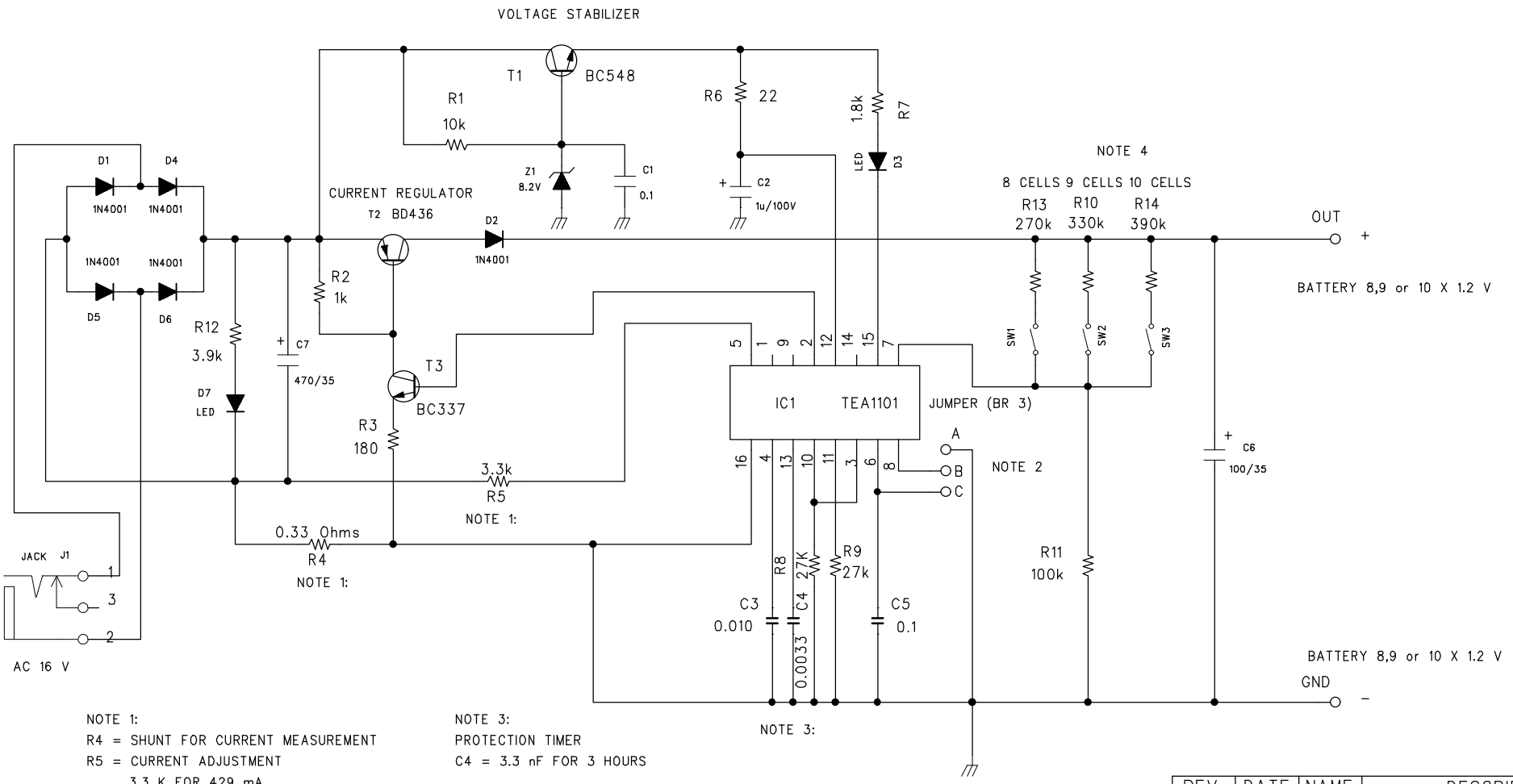

NOTE 1:
R4 = SHUNT FOR CURRENT MEASUREMENT
R5 = CURRENT ADJUSTMENT
3.3 K FOR 429 mA

NOTE 3:
PROTECTION TIMER
C4 = 3.3 nF FOR 3 HOURS

NOTE 2:
RATIO QUICK:TRICKLE CHARGE
NO JUMPER : 20:1
B-C CON: 10:1
A-B CON: 40:1

NOTE 4:
R10 = NUMBER OF CELLS PROGRAMMING
270K FOR 8 CELLS
330K FOR 9 CELLS
390K FOR 10 CELLS

REV.	DATE	NAME	DESCRIPTION	CHECK
3				
2				
1				

UNIT	SCALS :	SHEET OF	BUYER NAME : ALBRECHT
DRW.	CHK.	APP.	MODEL NAME : AUTO-CHARGER AE 2980
W,SCH SEPT24/1997			DRAWING NO. : DG630N2SCH