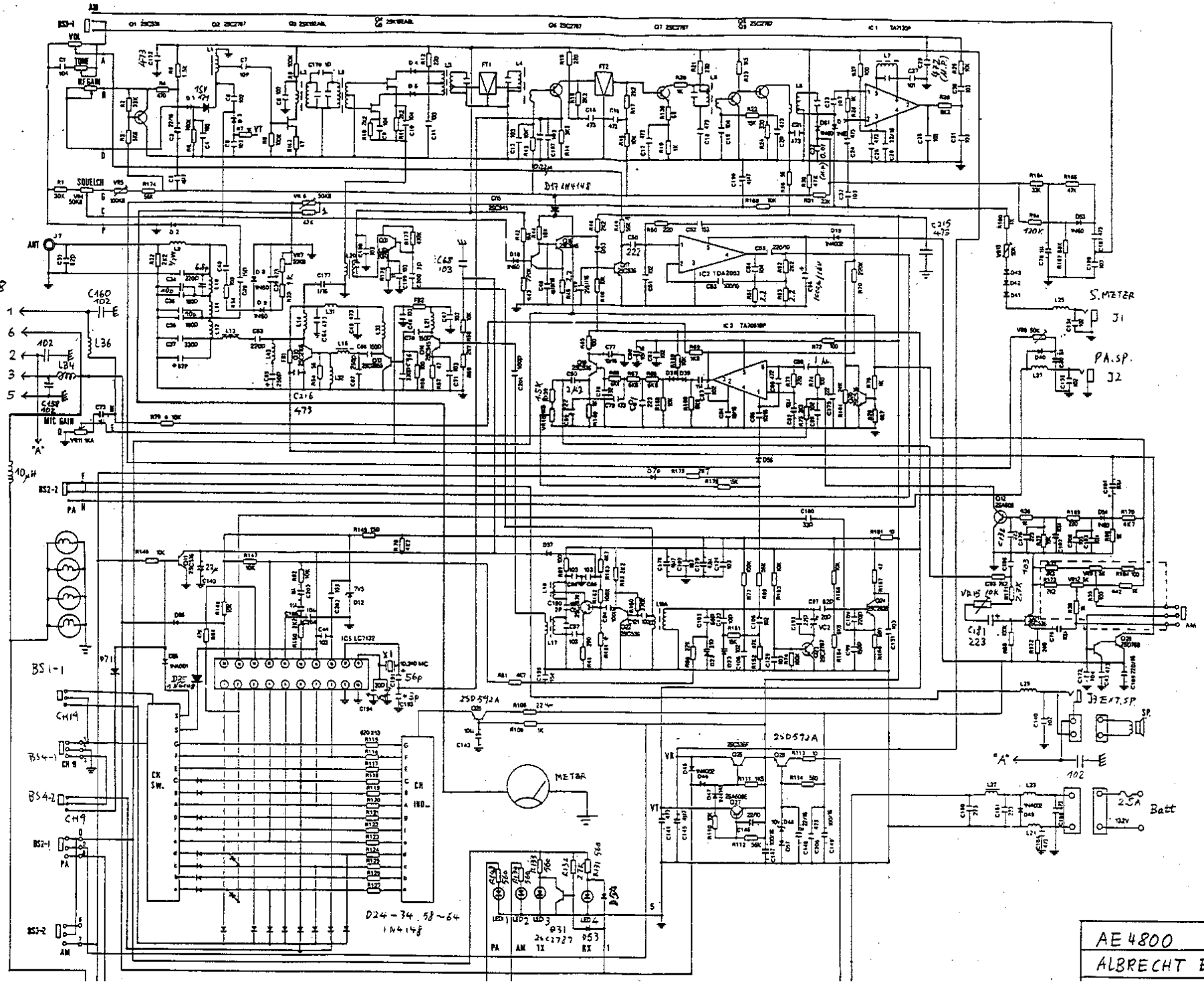
AE 4800
ALBRECHT ELECTRONIC
J8
(Mic) 1
(+) 6
(PTT-RX) 2
(PTT-TX) 3
(⏚) 5
S.METER
PA.SP.
EXT.SP.
METER
Batt
CH SW.
CH IND.
IC1 TA7130P
IC2 TDA2003
IC3 TA7061AP
IC5 LC7122
2SD592A
2SC2737
D24-34, 58-64
1N4148