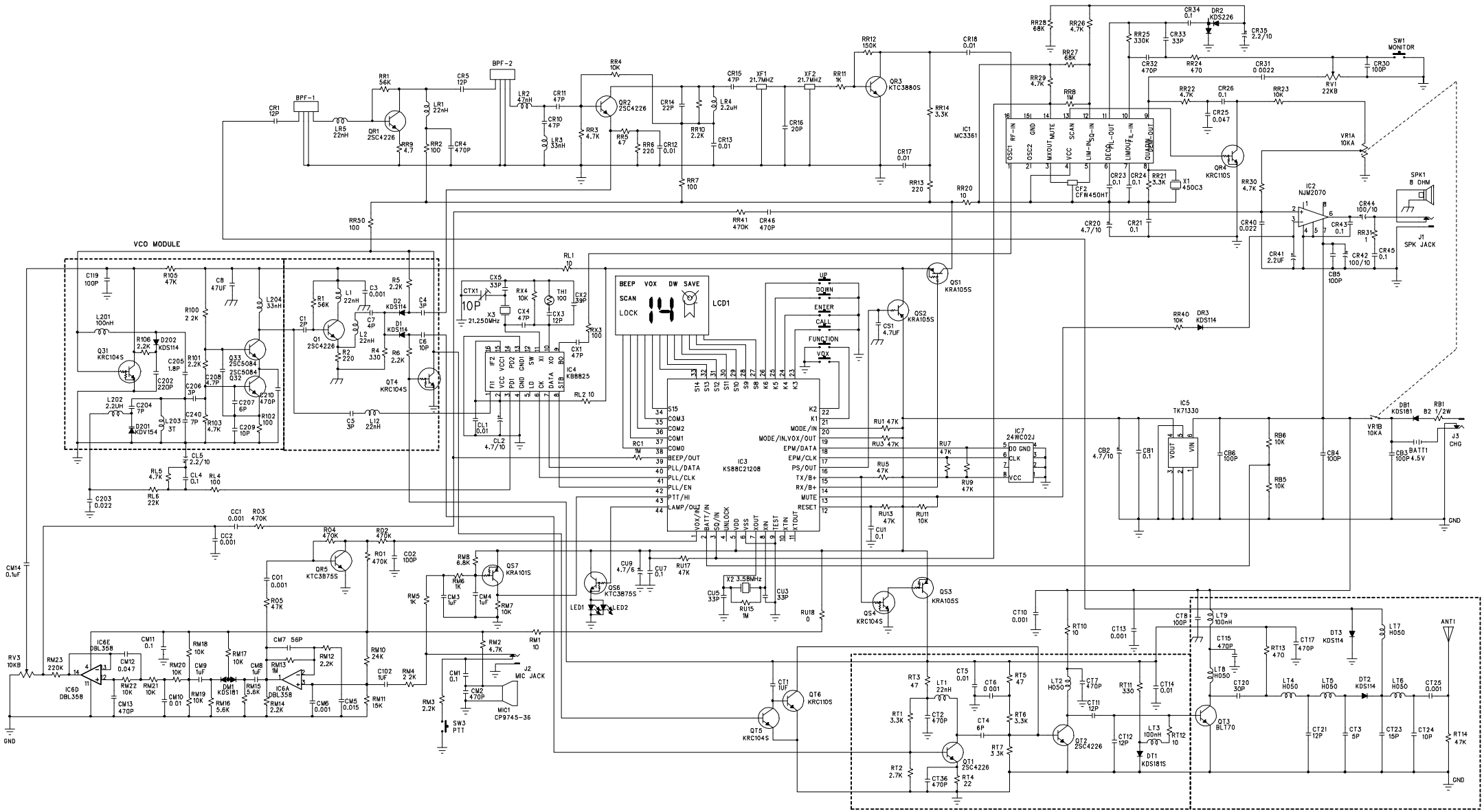ALAN-451a1.sch-1 - Tue Jan 16 09:42:01 2001