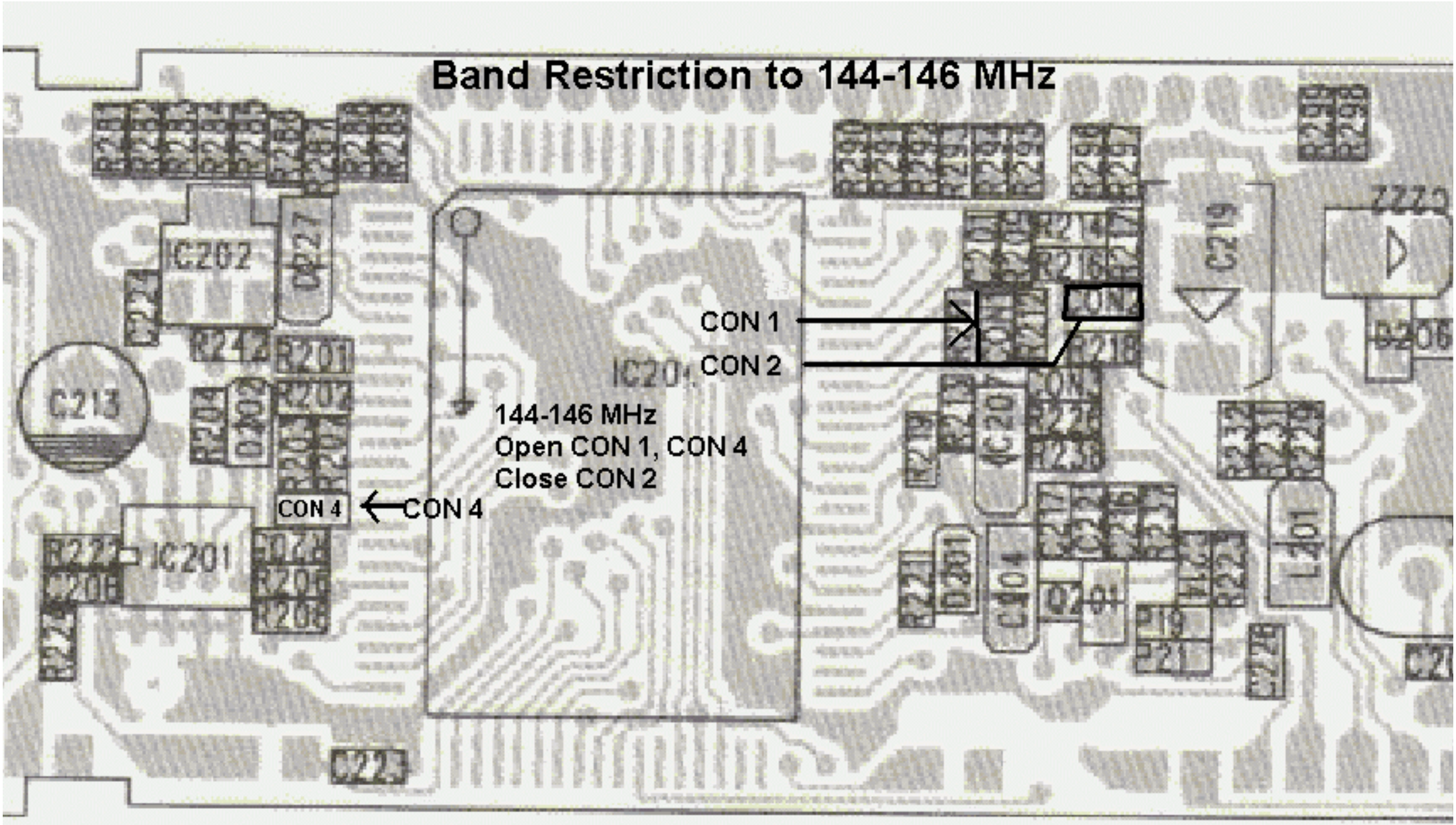

AE 540 DTMF Version only!