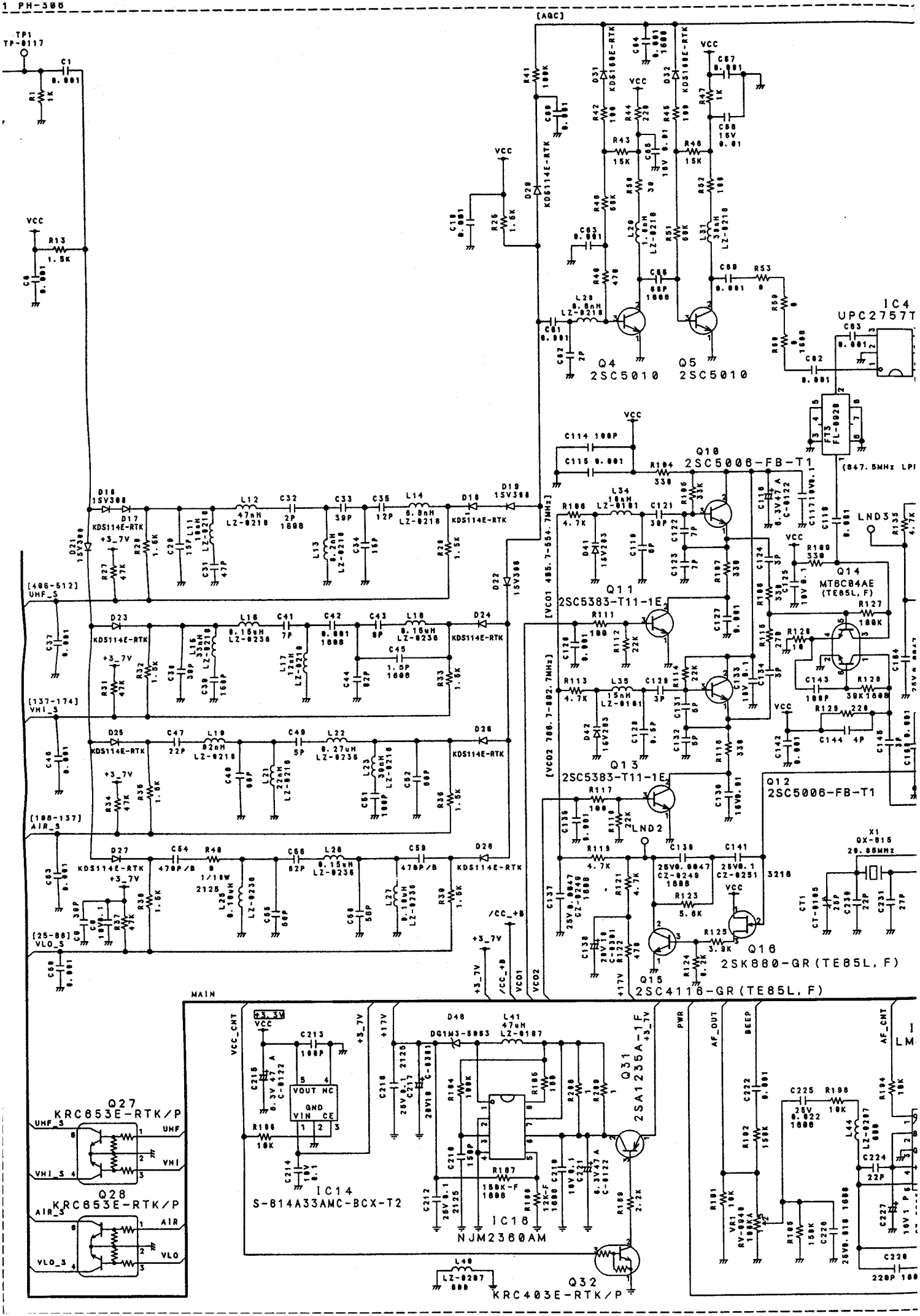
[AGC]
TP1
TP-0117
IC4
UPC2757T
Q4
2SC5010
Q5
2SC5010
Q10
2SC5006-FB-T1
Q11
2SC5383-T11-1E
Q13
2SC5383-T11-1E
Q12
2SC5006-FB-T1
Q14
MT8C04AE
(TE85L, F)
Q16
2SK880-GR(TE85L, F)
Q15
2SC4118-GR(TE85L, F)
(847.5MHz LPF
[496-512]
UHF_S
[137-174]
VHI_S
[198-137]
AIR_S
[25-88]
VLO_S
[VCO1 485.7-554.7MHz]
[VCO2 786.7-892.7MHz]
LND2
LND3
X1
QX-015
20.85MHz
MAIN
Q27
KRC653E-RTK/P
Q28
KRC653E-RTK/P
IC14
S-814A33AMC-BCX-T2
IC16
NJM2360AM
Q31
2SA1235A-1F
Q32
KRC403E-RTK/P
PWR
AF_OUT
BEEP
AF_CNT

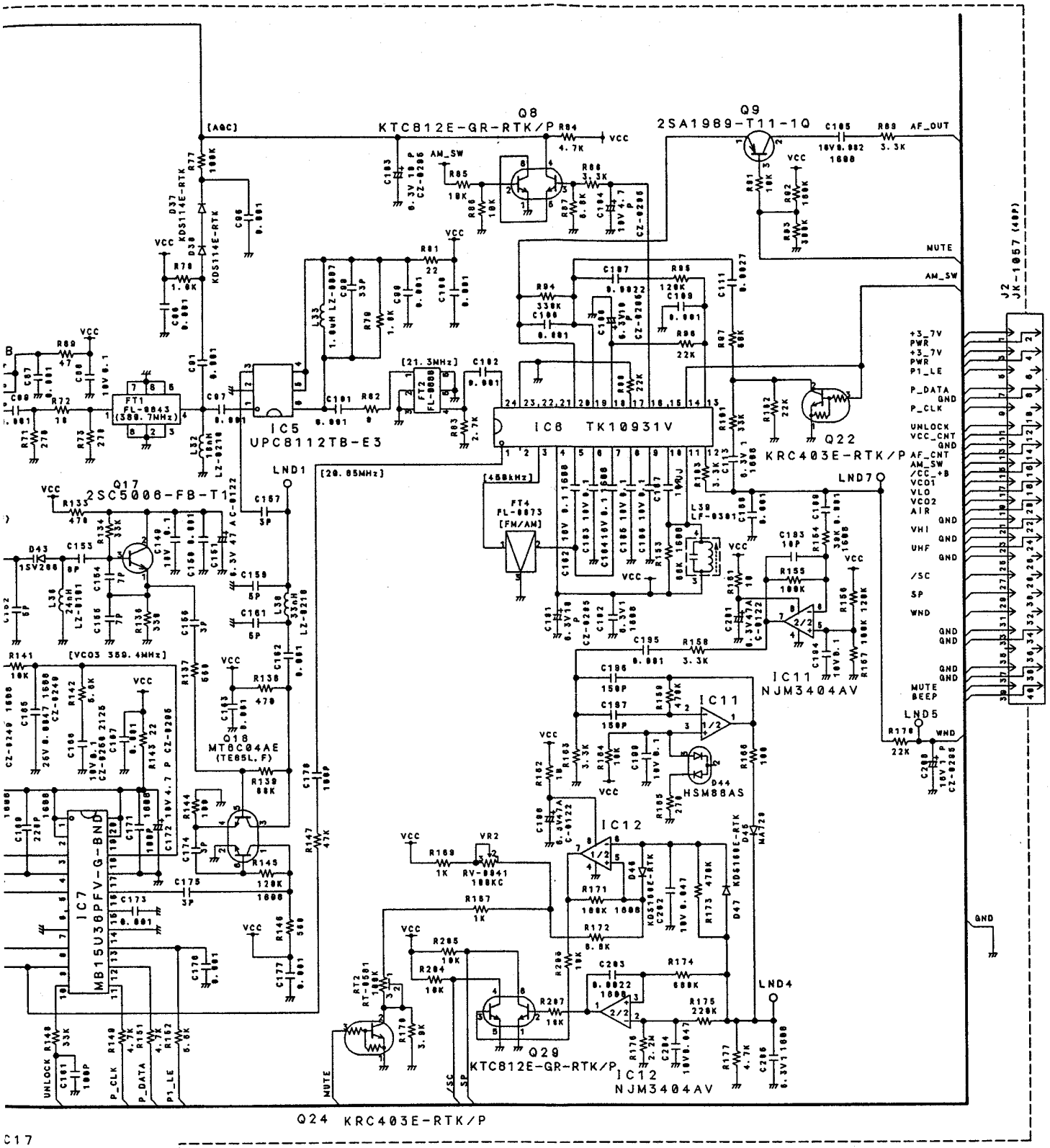

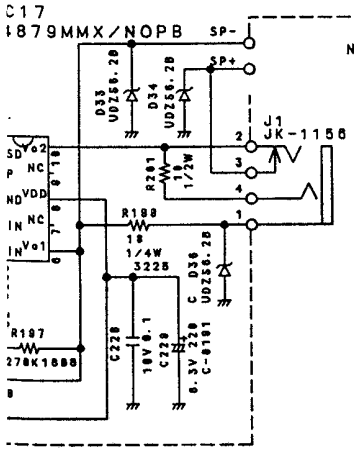

NOTES:
1. RESISTANCE VALUES ARE SHOWN IN OHMS UNLESS OTHERWISE NOTED. (K=KILO OHM, M=MEG OHM)
2. RESISTOR WATTAGES ARE 1/16W [1005] UNLESS OTHERWISE NOTED.
3. CAPACITANCE VALUES ARE INDICATED IN MICRO FARADS UNLESS OTHERWISE NOTED. (P=MICRO-MICRO FARAD)
4. ALL CAPACITORS TEMPERATURE CHARACTERISTICS ARE [CH] (LESS THAN 1000PF) OR [B] (MORE THAN 1000PF) UNLESS OTHERWISE NOTED.
5. CHIP CAPACITORS TYPE ARE [1005] AND RATED 50V UNLESS OTHERWISE NOTED.
6. RESISTOR TOLERANCES ARE J UNLESS OTHERWISE NOTED.

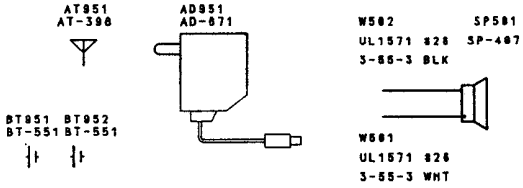

DESIGN	DRAWN. BY	UNIDEN No.	MODEL No.
'04/11/8	'04/11/8	UB323C	AE72H
KUROKI	KUROKI	TITLE MAIN ASS'Y SCHEMATIC DIAGRAM	
CHECK. BY	APPRO. BY		
		DRAWING No.	
REV. No		UNIDEN CORP.	